CAMBRIDGE INSTITUTE OF TECHNOLOGY

KR PURAM, BANGALORE- 560036

Computer Aided Engineering Drawing

VISVESVARAYA TECHNOLOGICAL UNIVERSITY
Belgaum, Karnataka

Course Title	Computer Aided Engineering Drawing	Semester	I/II
Course Code	25ED103/153	Course Type	PCC
Total No. of Contact Hours	25L+20P = 45 hrs.	CIA Marks	50
No. of Contact Hours/week (L:T:P)	2:0:2	SEE Marks	50
Credits	3	Total Marks	100
Teaching Department	Mechanical Engineering	Exam. Duration	3 hrs (Practical)

Course objectives: The student will be able to:

1. Understand the basic principles and conventions of engineering drawing.
2. Use drawing as a communication mode.
3. Generate pictorial views using CAD software.
4. Understand the development of surfaces.
5. Visualize engineering components.

Module-1	**RBT Levels: L1, L2**	**12 Hours**
Introduction: Significance of Engineering Drawing, BIS conventions, drawing sheets, drawing scales, dimensioning, line conventions, material conventions. **Use of Simple CAD tools:** Co-ordinate system and reference planes HP, VP, RPP & LPP of 2D/3D environment. Selection of drawing sheet size and scale. Commands and creation of Lines, coordinate points, axes, polylines, square, rectangle, polygons, splines, circles, ellipse, text, move, copy, off-set, mirror, rotate, trim, extend, break, chamfer, fillet and curves **Orthographic Projections:** Principles of orthographic projections - quadrant systems, projection of points (All quadrants); Projection of lines (first angle projection); Projection of planes - inclined to HP and VP (first angle projection). TEXT 1 ; CHAPTER 8,9,10 &12.		
Module-2	**RBT Levels: L2, L3, L4**	**10 Hours**
Orthographic Projection of Solids: Orthographic projection of right regular solids (Solids Resting on HP only): Prism & Pyramid (triangle, square, rectangle, pentagon, hexagon), Cylinder, Cone and Cube (No freely suspended problems). TEXT 1 ; CHAPTER 13.		
Module-3	**RBT Levels: L2, L3**	**10 Hours**

Isometric Projections: Isometric scale, Isometric projection of hexahedron (cube), right regular prisms, pyramids, cylinders, cones, and spheres. Isometric projection of a combination of two simple solids. Frustum of solids not to be given. TEXT 1 ; CHAPTER 17.		
Module-4	**RBT Levels: L2, L3, L4**	**08 Hours**
Development of Lateral Surfaces of Solids: Development of lateral surfaces of frustum and truncated right regular prisms, cylinders, pyramids, and cones resting with base on HP only (Axis perpendicular to HP and parallel to VP). The section plane perpendicular to VP, inclined to HP and passing through only vertical surfaces of the solid to be considered. TEXT 1 ; CHAPTER 15.		
Module-5	**RBT Levels: L2, L3**	**05 Hours**
Multidisciplinary Applications & Practice (Not for SEE): **Free hand Sketching;** True free hand, Guided Free hand, Roads, Buildings, Utensils, Hand tools & Furniture's etc. **Drawing Simple Mechanisms;** Gear trains, Ratchets, two-wheeler cart & Four-wheeler carts to dimensions etc. **Electric Wiring and lighting diagrams;** Like, Automatic fire alarm, Call bell system, UPS system, Basic power distribution system using suitable software. **Basic Building Drawing;** Like, Architectural floor plan, basic foundation drawing, steel structures-Frames, bridges, trusses using Auto CAD or suitable software. **Electronics Engineering Drawings**- Like, Simple Electronics Circuit Drawings. **Graphs & Charts:** Like, Column chart, Pie chart, Line charts, Gantt charts, etc. using Microsoft Excel or any suitable software.		

Suggested Learning Resources:	
Textbooks:	
1	Engineering Drawing: Plane and Solid Geometry, Bhatt, N.D., Charotar Publishing House Pvt. Limited, 53rd edition, 2019.
2	Engineering Drawing, Parthasarathy N. S., Vela Murali, Oxford University Press, 1st Edition, 2015.
Reference Books:	
1	Engineering Drawing and Graphics, Venugopal K., New Age International Publishers, 6th Edition, 2014.
2	Electrical Engineering Drawing, Bhattacharya S. K., New Age International publishers, 2nd Edition, 2005.

Web links and Video Lectures (e-Resources):

- https://youtu.be/heIobpUVZqc?si=vO2_b5XlFN5JTnM1
- https://youtu.be/LTl3nBdOUGQ?si=OJwxFEq6AismL3iR
- https://youtu.be/mStD1NN42tE?si=Ob-h2q1bgb-gNx3v
- https://youtu.be/OgMn4KeyctI?si=BAVB3bcn77AjOSKa
- https://youtu.be/zi7XYYoqg9E?si=_7QTzomOexJSGWbe
- https://youtu.be/zKFAbmnUvGU?si=i9_I9_FFcIkUbIj-
- https://youtu.be/1LsW8pf7a1w?si=PC_vf3K3HTRA_-R3
- https://youtube.com/playlist?list=PLIhUrsYr8yHwdB96ft6c0Uwc4SDCLuG1v&si=qLLD6seDnPvxJbDa

Activity-Based Learning (Suggested Activities in Class)/ Practical Based learning
● Creating 3D models using cardboard. ● Modelling and Printing of 3D components.

Course outcomes: At the end of the course, the student will be able to	
CO1	Apply basic BIS drawing conventions and CAD tools to create orthographic projections of points, lines, and planes in first-angle projection.
CO2	Construct orthographic views of right regular solids resting on HP using first-angle projection methods.
CO3	Build isometric projections of simple and combined solids using isometric scale and projection principles.
CO4	Develop the lateral surfaces of truncated and frustum solids cut by inclined planes using appropriate development techniques.
CO5	Apply engineering graphical drawing tools to represent basic mechanical, electrical, civil, and electronics systems using freehand sketches and suitable software.

CO-PO Mapping

CO/ PO	PO 1	PO 2	PO 3	PO 4	PO 5	PO 6	PO 7	PO 8	PO 9	PO 10	PO 11	PO 12	PSO 1	PSO 2	PSO 3
CO1	3	2			3	1		1	1	3		2	1	3	1
CO2	3	2			3	1		1	1	3		2	1	3	1
CO3	3	2			3	1		1	1	3		2	1	3	1
CO4	3	2			3	1	1		1	3		2	1	3	1
CO5	3	2			3				1	3		2		3	

High-3, Medium-2, Low-1

Question Paper Pattern:

1. **CIE Assessment Pattern:**

SCHEME FOR INTERNAL ASSESSMENT (IA)		
	DETAILS	MAX. MARKS
SKETCHBOOK	Classwork	10
	Assignment (Model preparation)	10
	Total (A)	**20**
At least one Test covering all the modules is to be conducted for 100 marks and evaluation to be based SEE pattern, and the same is to be scaled down to **30 Marks (B)**		
Final CIE Marks: **(A)** + **(B)** = **50 Marks.**		

SEE Assessment Pattern:

Scheme of Evaluation for Semester End Examination (SEE)				
Module	1	2	3	4
Max. Marks	20	30	25	25
Q. No.	Q1	Q2	Q3	Q4

NOTE:

1. SEE should be conducted for 100 Marks and Obtained Marks reduced to 50Marks.
2. One Full Questions to be set from each Unit. Module-1, [Points and Lines, (10+10 marks) or Planes (20 marks)] per the below tabled weightage details.
3. Unit 1 and Unit 3 to have both manual sketching and computer solution/print out.
4. Unit 2 and Unit 4 to have only computer solution/print out.

Module	**Max. Marks Weightage**	**Evaluation Weightage in marks**	
		Computer display and print out (a)	**Sketching (b)**
Module 1	20	10	10
Module 2	30	30	No sketching
Module 3	25	15	10
Module 4	25	20	No sketching
Total	**100**	**80**	**20**
Consideration of SEE Marks		**Total of (a) + (b) = Final SEE marks(100)**	

MODULE 1

ORTHOGRAPHIC PROJECTIONS OF PLANES

[20 MARKS]

1) An equilateral triangular lamina of 25mm side lies with one of its edges on HP such that the surface of the lamina is inclined to HP at 60^0. The edge on which it rests is inclined to VP at 45^0.draw projections.

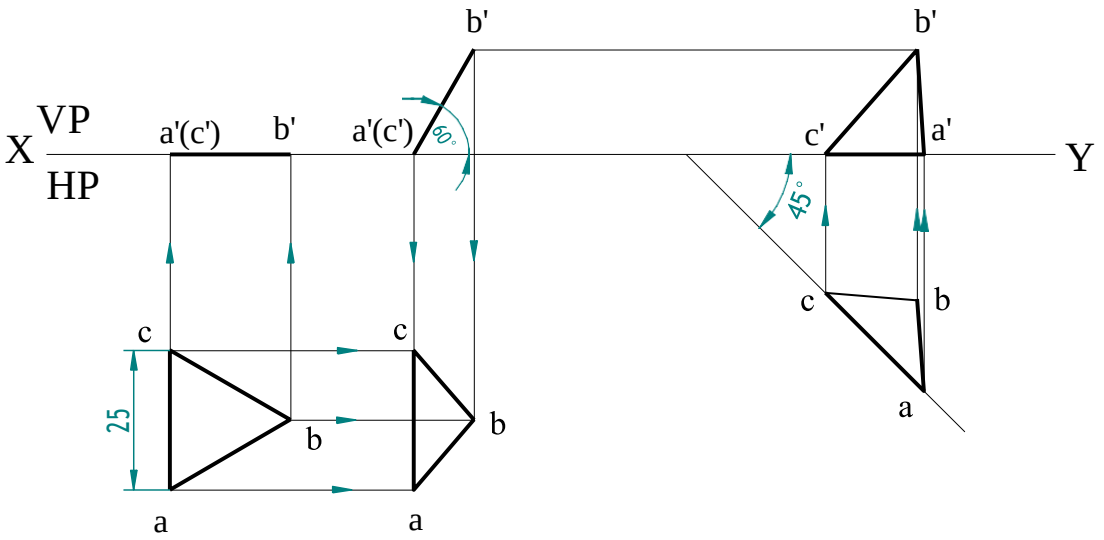

2) A triangular lamina of 25mm sides rests on one of its corner on VP such that the median is passing through the corner on which it rests is inclined at 30^0 to HP and 45^0 to VP. Draw its projections. [***Assignment***]

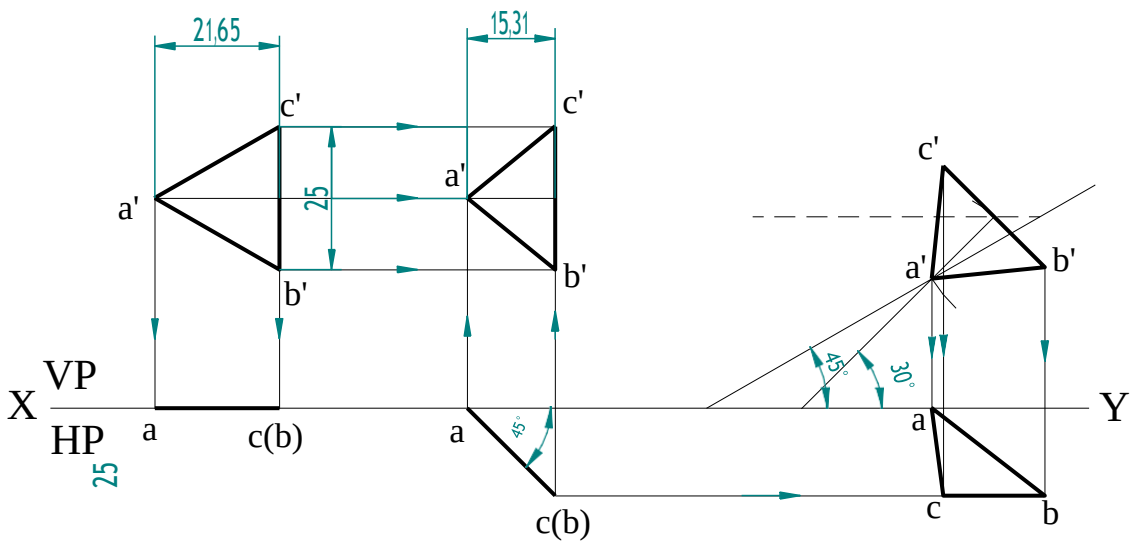

3) A 30^0-60^0 setsquare of 60mm longest side is so kept such that the longest side is in HP, making an angle of 30^0 with VP. The setsquare itself inclined at 45^0 to HP. Draw projections of the setsquare.

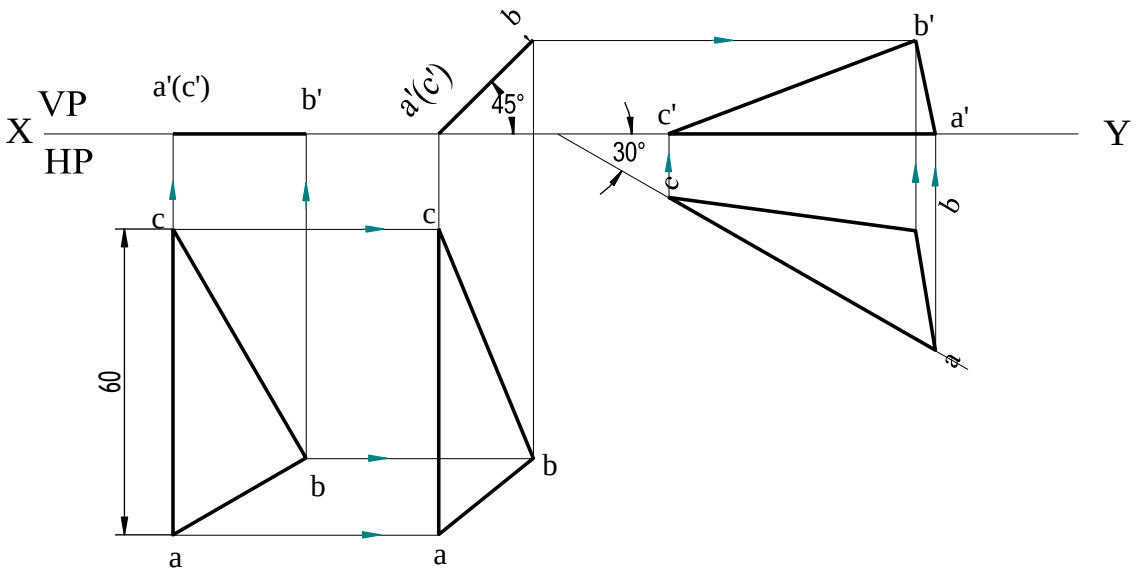

4) A square plate of 30mm sides rests on HP such that one of the diagonals is inclined at 30^0 to HP and 45^0 to VP. Draw its projections.

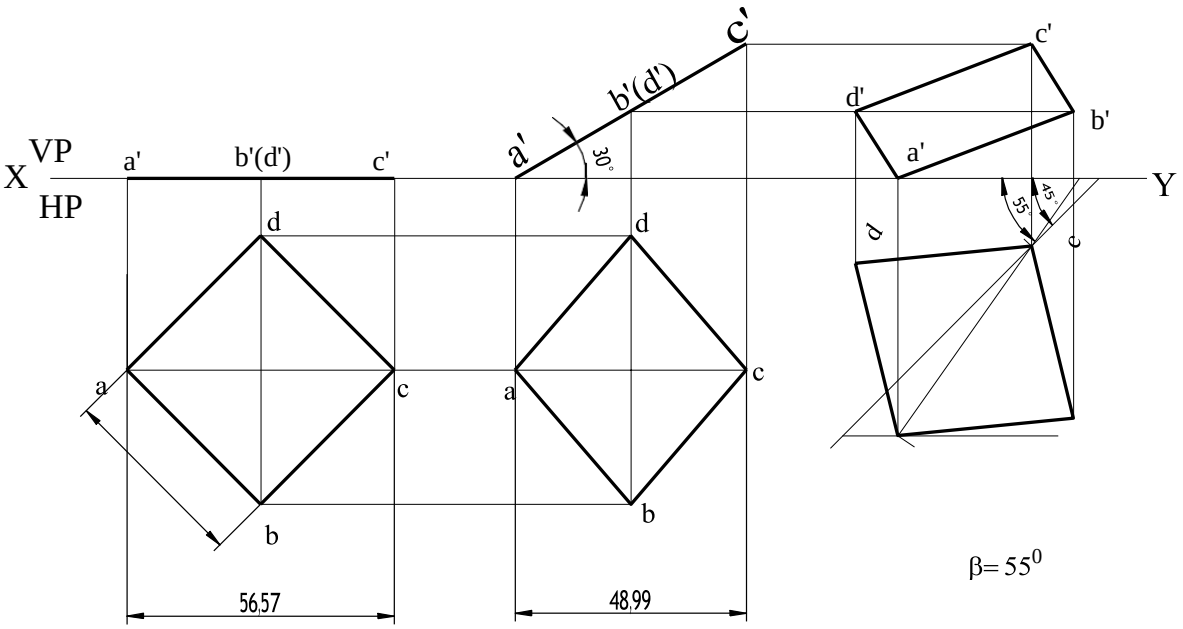

5) The top view of a square lamina of side 30mm is a rectangle of sides 30mmX20mm with the longer side of the rectangle being parallel to both HP and VP. Draw the top and front views of the square lamina. what is the inclination of the surface of the lamina with HP and VP?

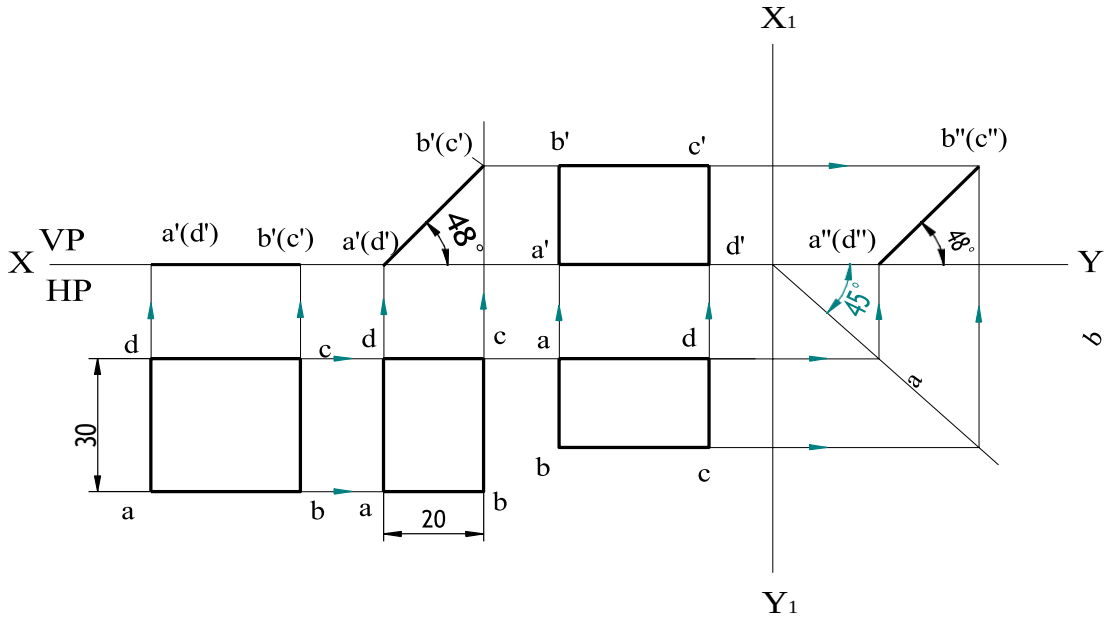

6) A rectangular plate of negligible thickness of size 35mmX20mm has one of its shorter edges in VP with that edge inclined at 40^0 to HP. Draw the top view if its front view is a square of side 20mm.

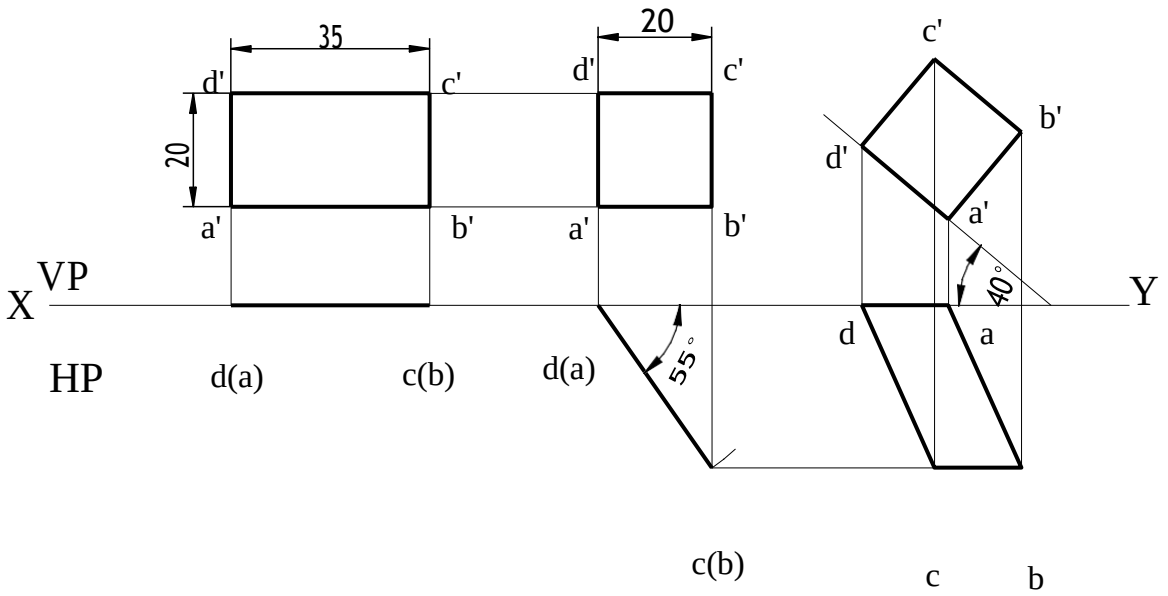

7) A pentagonal lamina of edges 25mm is resting on HP with one of its corners such that the edge opposite to this corner is 20mm above HP and makes an angle of 45^0 with VP. Draw the top and front views of the plane lamina in this position. Determine the inclination of the lamina with HP.

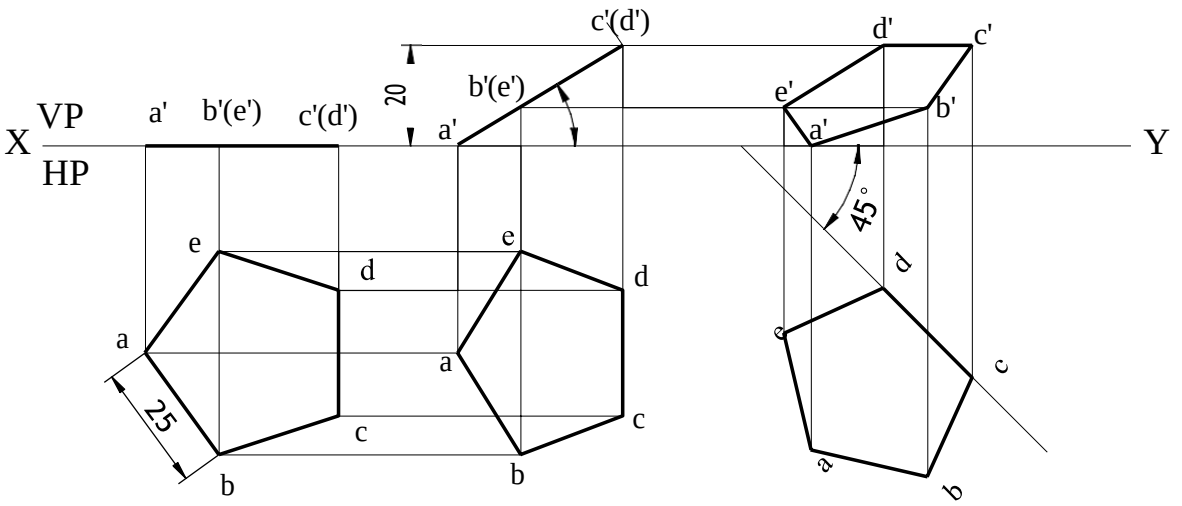

8) A regular pentagonal lamina of 25mm side is resting on one of its corner on HP while the sides opposite to this corner touches VP. If the lamina makes an angle of 60^0 with HP and 30^0 with VP. Draw the projections of the lamina.

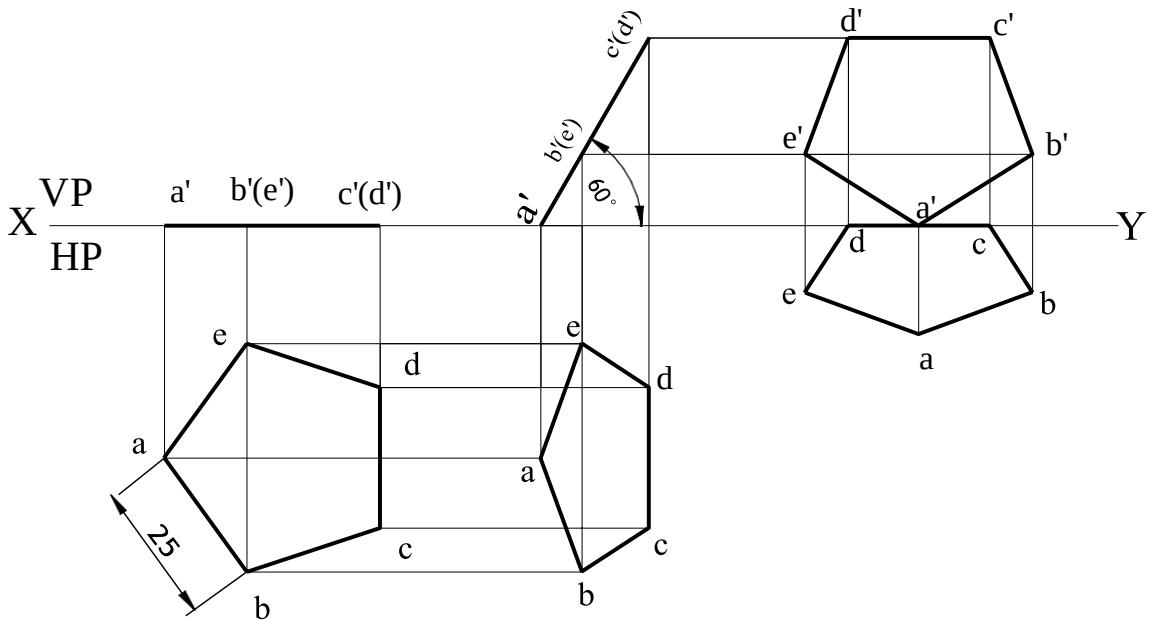

9) A pentagonal lamina having edges 25mm is placed on one of its corners on HP such that the perpendicular bisector of the edge passing through the corner on which the lamina rests is inclined at 30^0 to HP and 45^0 VP. Draw the top and front views of the lamina. [***Assignment***]

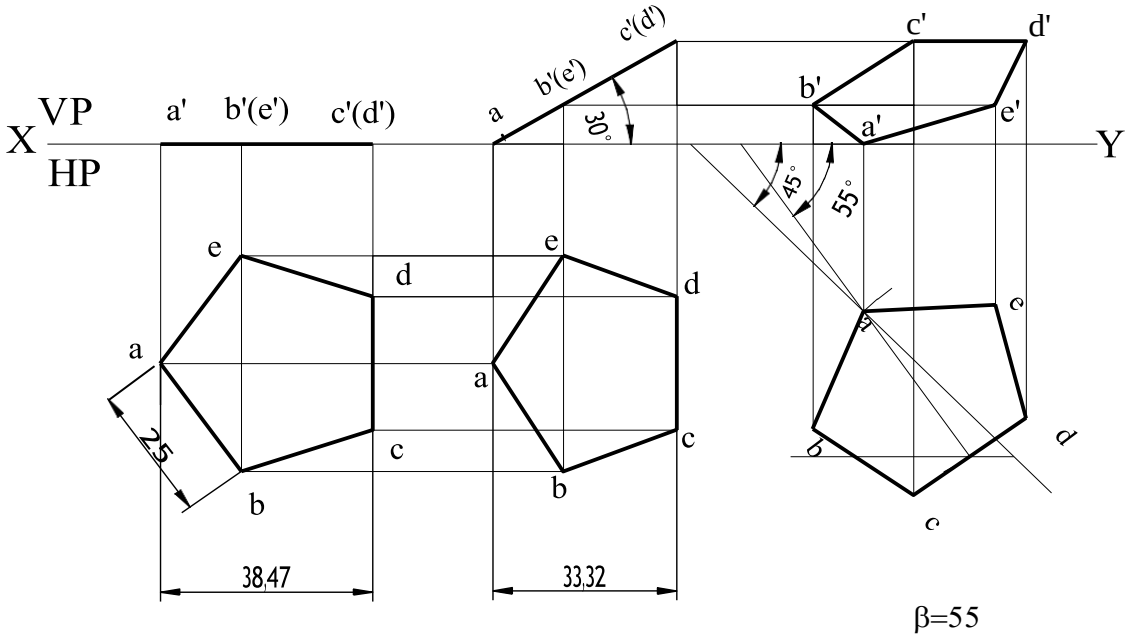

10) A pentagonal lamina having edges 25 mm is placed on one of its corners on VP such that the surface makes an angle 30^0 with VP and perpendicular bisector of the edge passing through the corner on which the lamina rests is inclined at 45^0 to HP. Draw the top and front views of the lamina.

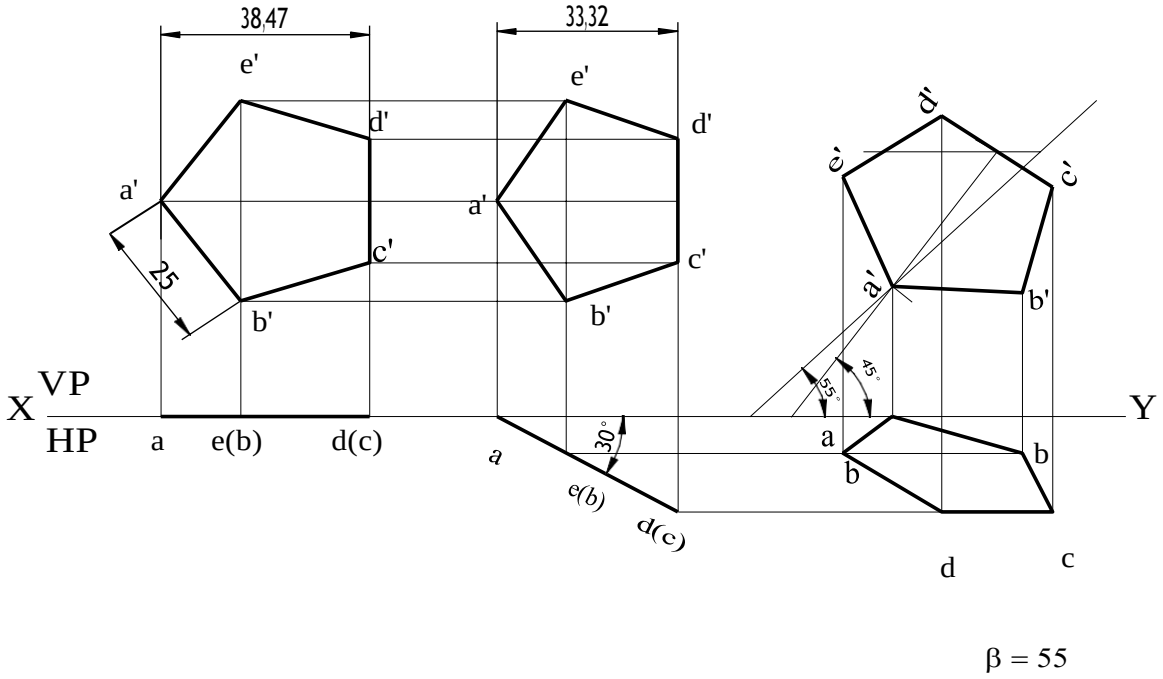

11) A regular hexagonal lamina of sides 25mm is lying in such a way that one of its sides on HP while the side opposite to the side on which it rests is on VP. If the lamina makes 60^0 to HP. Draw the projections of the lamina.

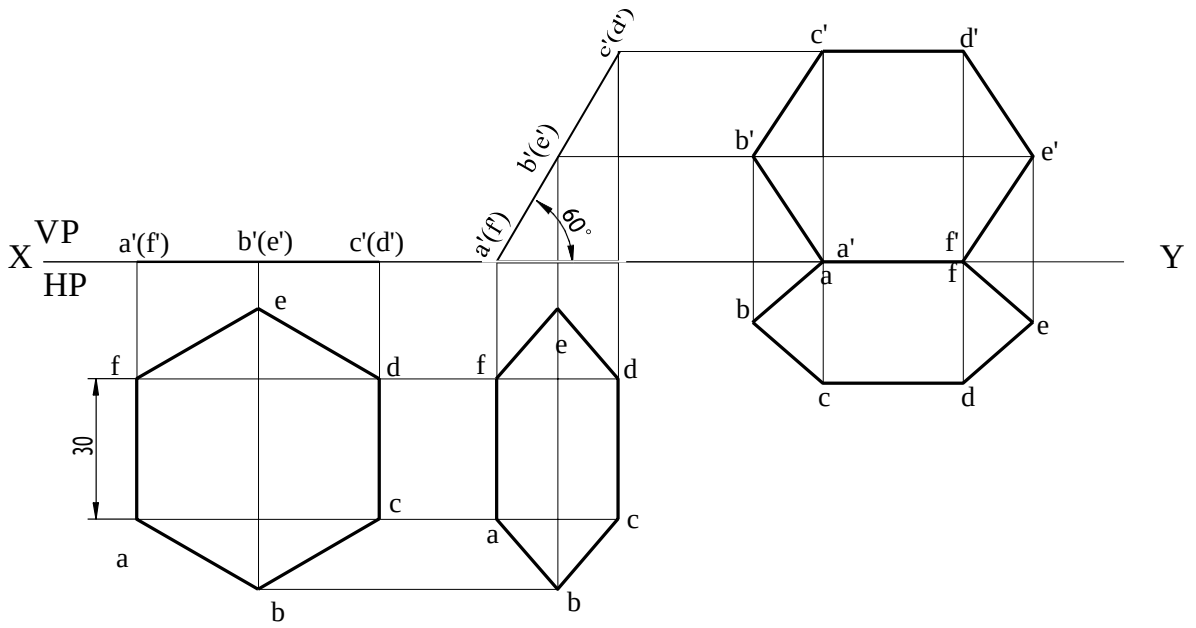

12) A regular hexagonal lamina of side 25mm is lying in such a way that one of its corner on HP while the corner opposite to the corner on which it rests is on VP. If the lamina makes 60^0 to HP. Draw the projections of the lamina. [***Assignment***]

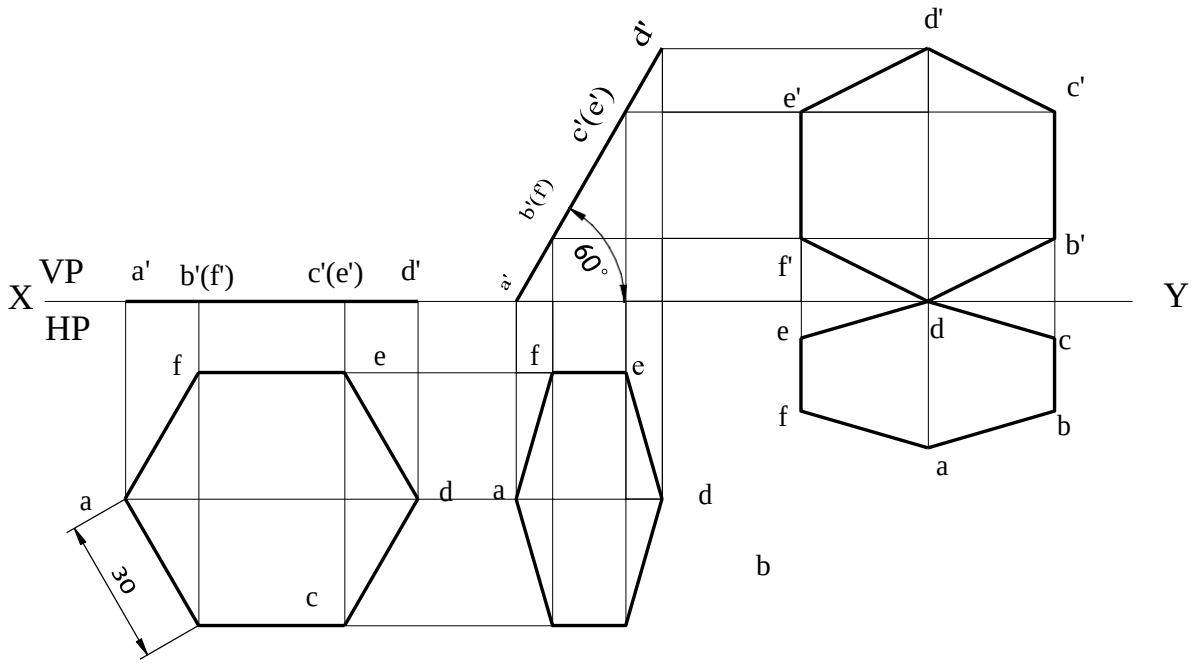

13) A hexagonal lamina of sides 25mm rests on one of its corners on HP. The corner opposite to the corner on which it rests is 35mm above HP and the diagonal passing through the corner on which it rests is inclined at 30^0 to VP. Draw its projection. Find the inclination of the surface with HP.

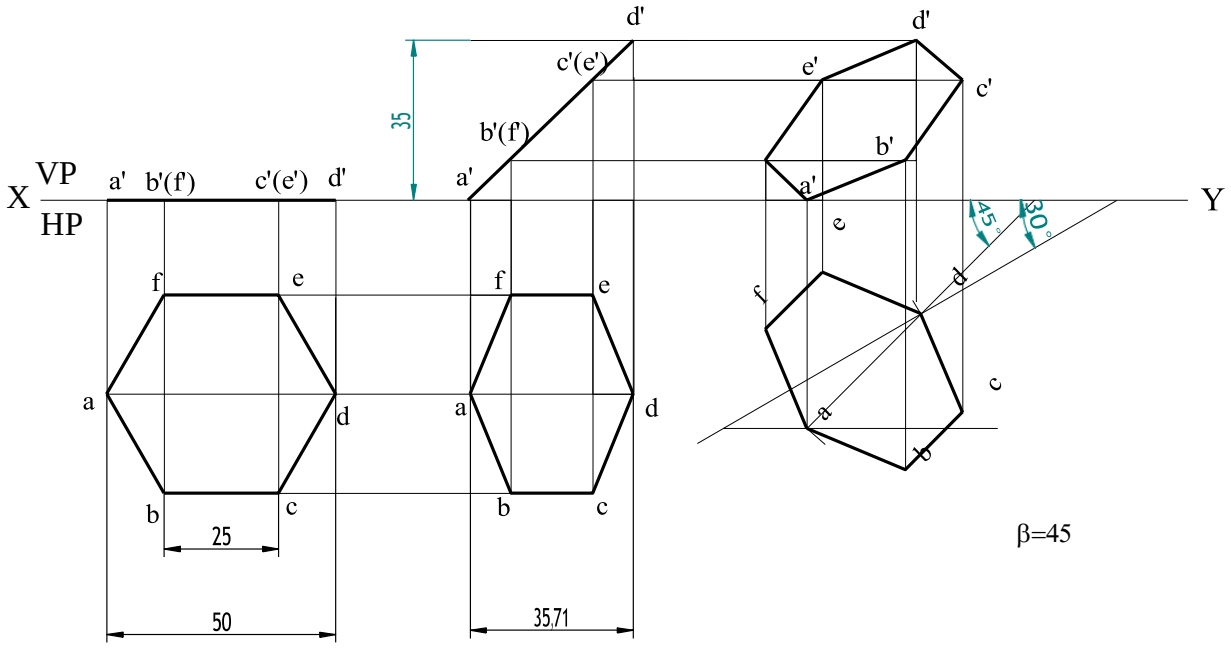

14) A circular lamina of 50mm diameter rests on HP such that one of its diameters is inclined at 30^0 to VP and 45^0 to HP. Draw its top and front views in this position.

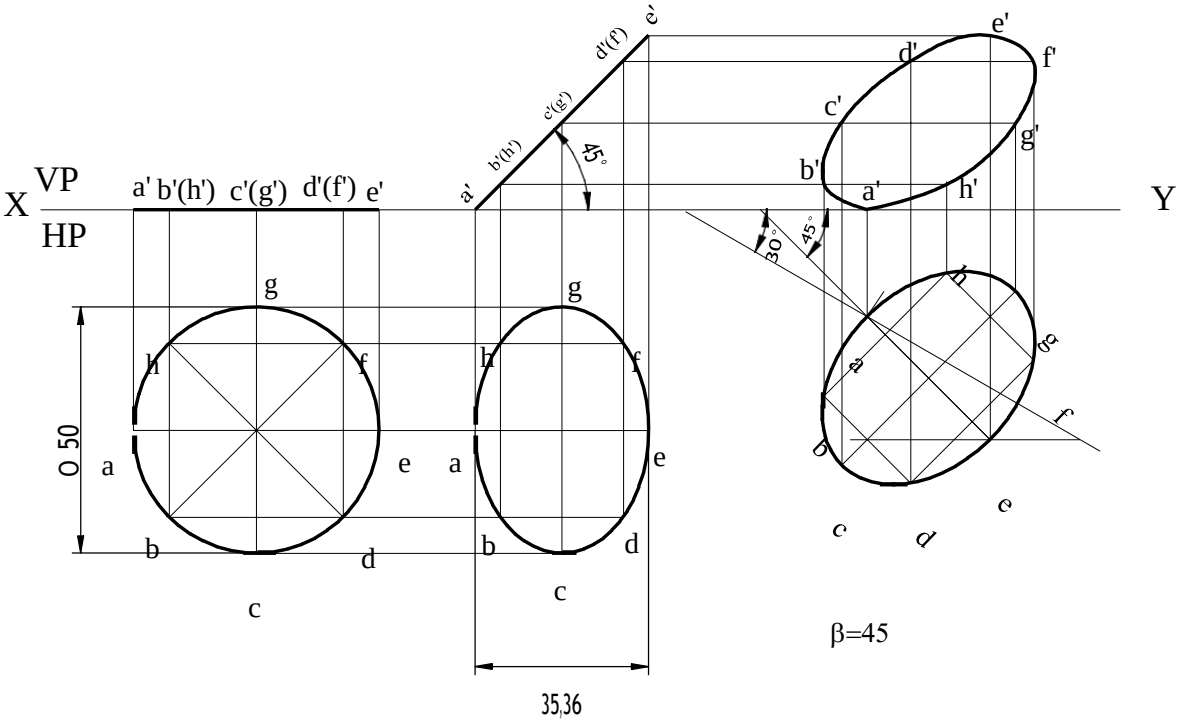

15) A circular lamina inclined to the VP appears in the front view as an ellipse of major axis 30mm and minor axis 15mm. the major axis is parallel to both HP and VP. One end of the minor axis is in both the HP and VP. Draw the projections of the lamina and determine the inclination of the lamina with the VP.

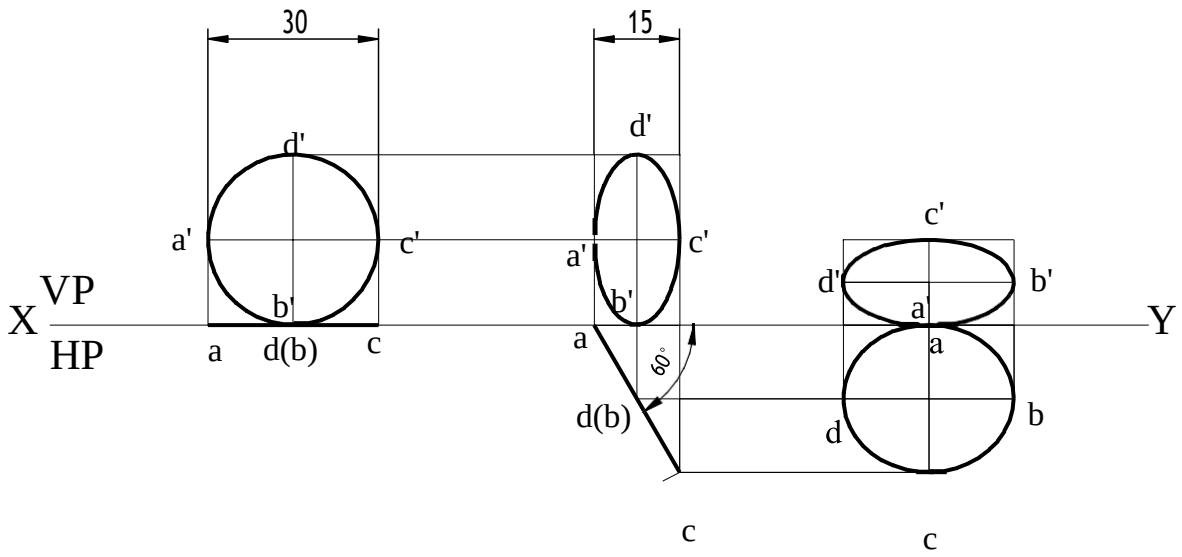

MODULE-2

ORTHOGRAPHIC PROJECTIONS OF PLANES

[30 MARKS]

DIFFERNCES CAN OBSERVE IN DIFFERENT TYPES OF SOLID PROBLEMS IN REFFERANCE TO SOLUTION BOOK

TYPES OF PROBLEMS	PRISM		PYRAMID	
	2ND POSITION TOP VIEW	3RD POSITION FRONT VIEW	2ND POSITION TOP VIEW	3RD POSITION FRONT VIEW
CORNER OR EDGE RESTING WITH HP & VP INCLINATION	TOP FACE VISIBLE (RIGHT SIDE) BOTTOM FACE HIDDEN (LEFT SIDE)	BOTTOM FACE VISIBLE TOP FACE HIDDEN	BASE HIDDEN (LEFT SIDE)	BASE VISIBLE
SUSPENDED PROBLEMS (TAKE CORNER IN RIGHT SIDE IN 1ST POSITION)	TOP FACE VISIBLE (LEFT SIDE) BOTTOM FACE HIDDEN (RIGHT SIDE)	TOP FACE VISIBLE BOTTOM FACE HIDDEN	BASE VISIBLE (RIGHT SIDE)	BASE HIDDEN
SLANT EDGE OR SLANT FACE	-	-	BASE VISIBLE(RIGHT OR LEFT SIDE)	BASE VISIBLE

TO FIND GIVEN PROBLEM IS β OR α PROBLEM OR NOT

REFERNCE FOR 3RD POSITION INCLINATION		DIRECT INCLINATION	APPEARCE TO BE INCLINED
FIRST POSITION	SECOND POSITION		
TRUE LENGTH	TRUE LENGTH	NOT β OR α PROBLEMS	NOT β OR α PROBLEMS
TRUE LENGTH	APPARENT LENGTH	β OR α PROBLEMS	NOT β OR α PROBLEMS

1. A square prism 35mm sides of base and 65mm axis length rests on HP on one of its edges of the base which is inclined to VP at 30^0. Draw the projections of the prism when the axis is inclined to HP at 45^0

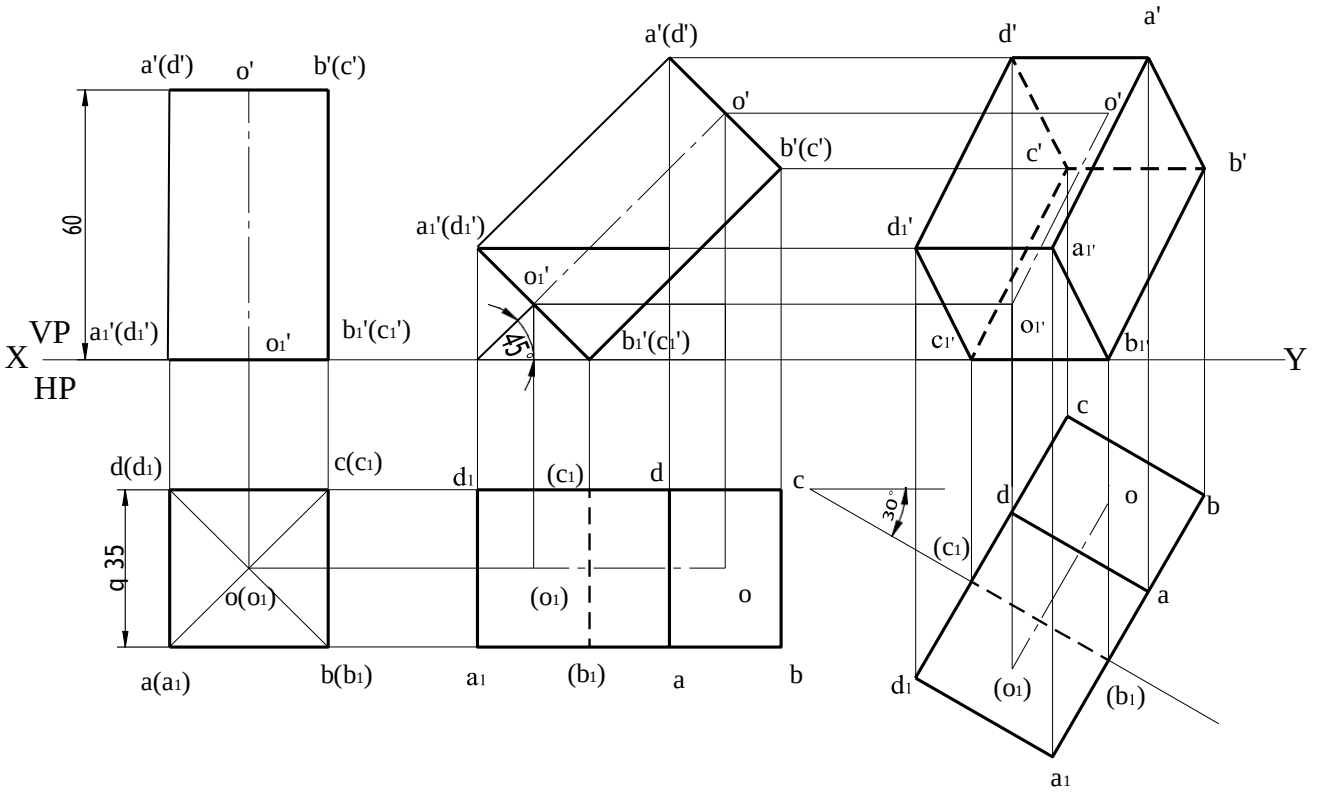

2. A square prism 35mm sides of base and 60mm axis length rests on HP on one of its corners of the base such that the two base edges containing the corner on which it rests make equal inclinations with HP. Draw the projections of the prism when the axis of the prism is inclined to HP at 40^0 and to VP at 30^0.

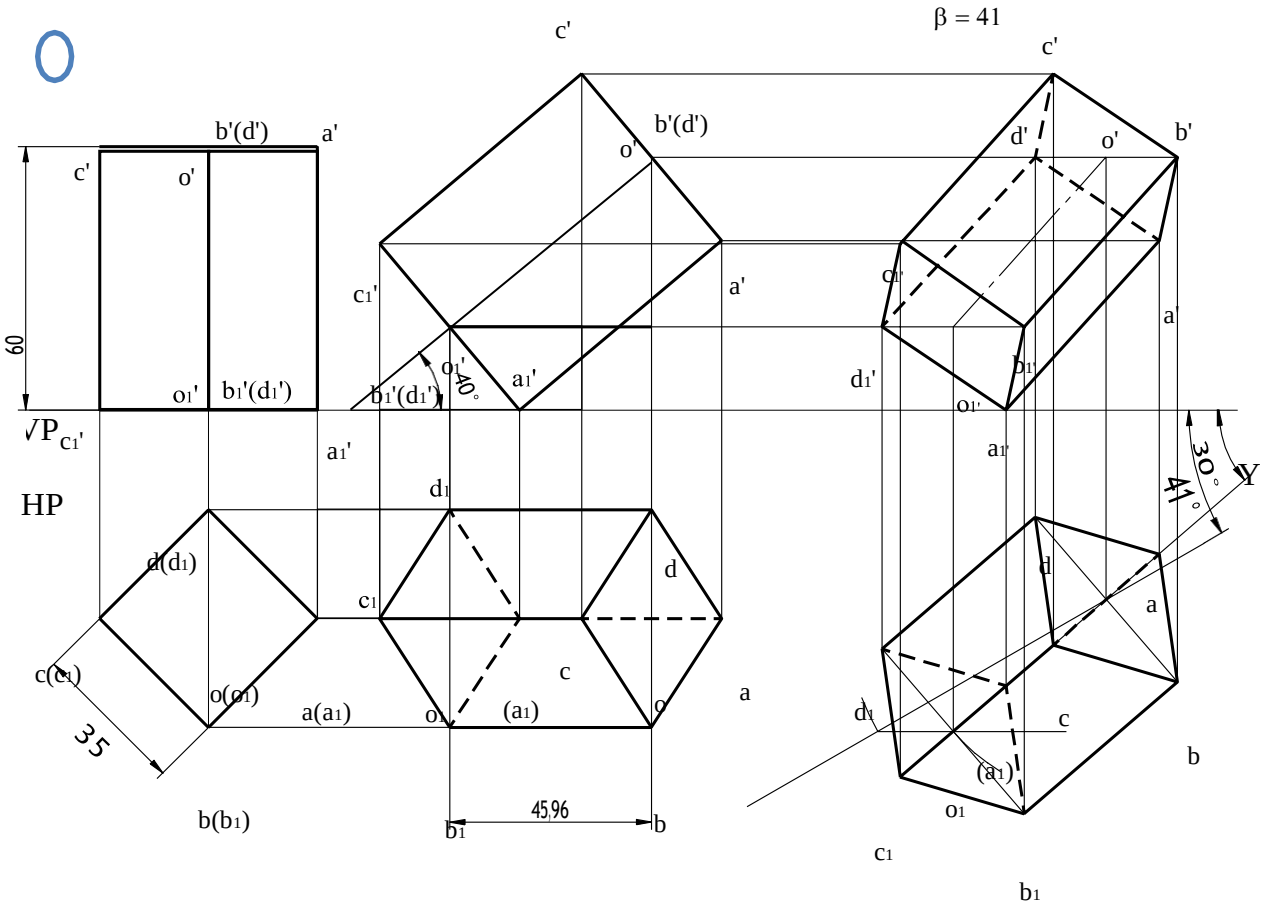

3. A pentagonal prism 25mm sides of base and 60mm axis length rests on HP on one its edges of the base which is inclined to VP at 30^0. Draw the projections of the prism when the axis is inclined to HP at 40^0.

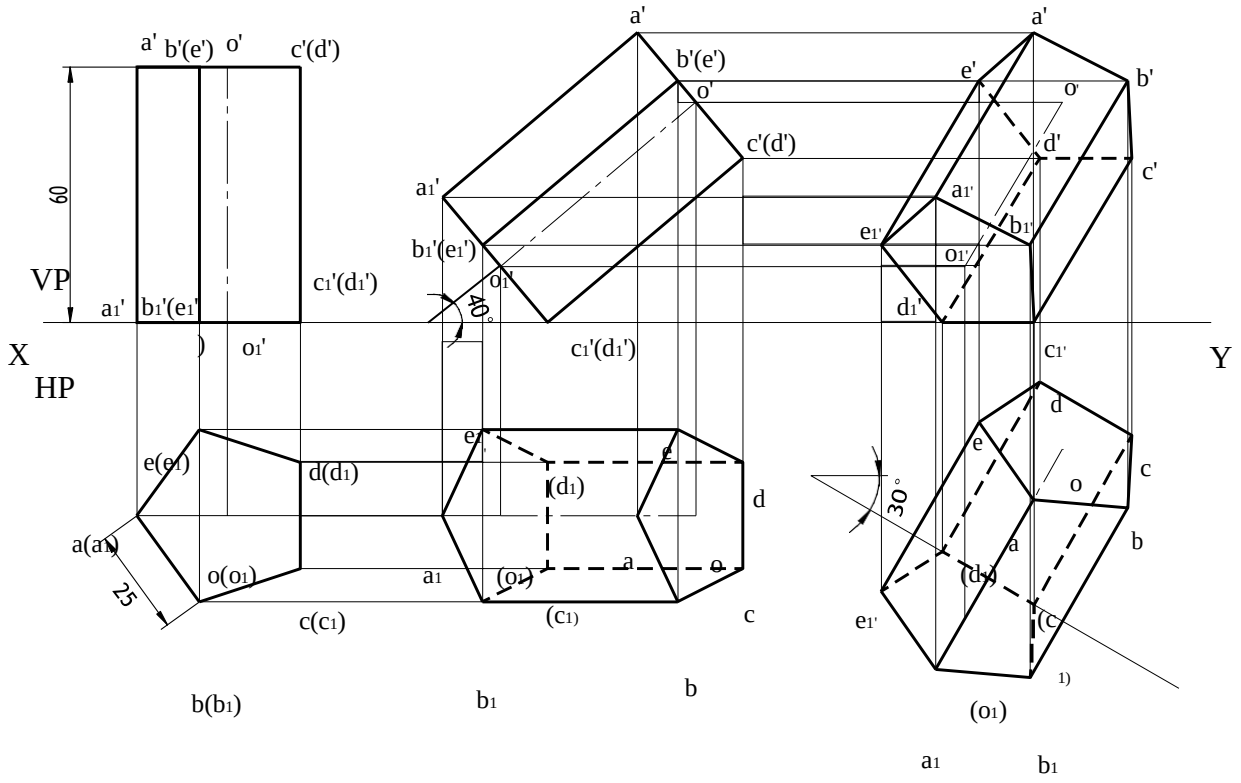

4. A pentagonal prism 25mm sides of base and 50mm axis length rests on HP on one its corners of the base such that the two base edges containing the corner on which it rests make equal inclination with HP. Draw the projections of the prism when the axis of the prism is inclined to HP at 40^0 and to VP at 30^0.

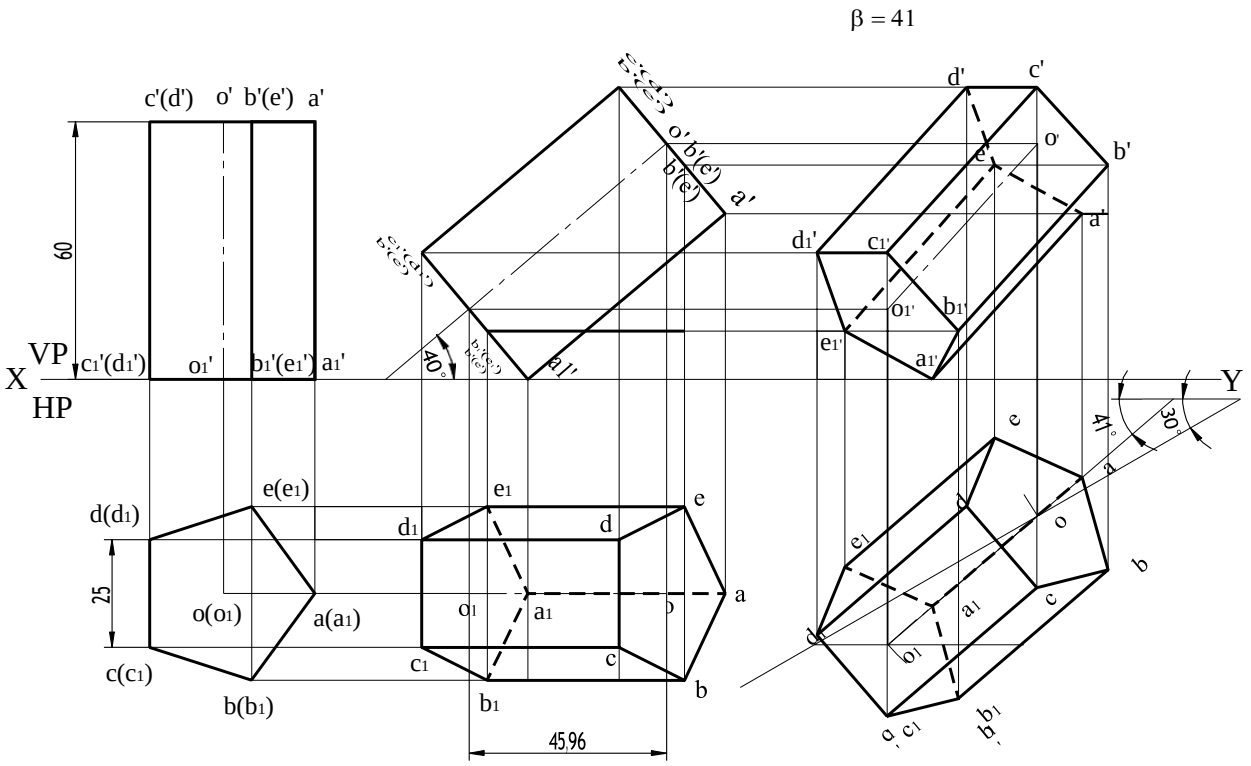

5. A square pyramid 35mm sides of base and 65mm axis length rests on HP on one of its edges of the base which is inclined to VP at 30^0. Draw the projections of the pyramid when the axis is inclined to HP at 45^0.

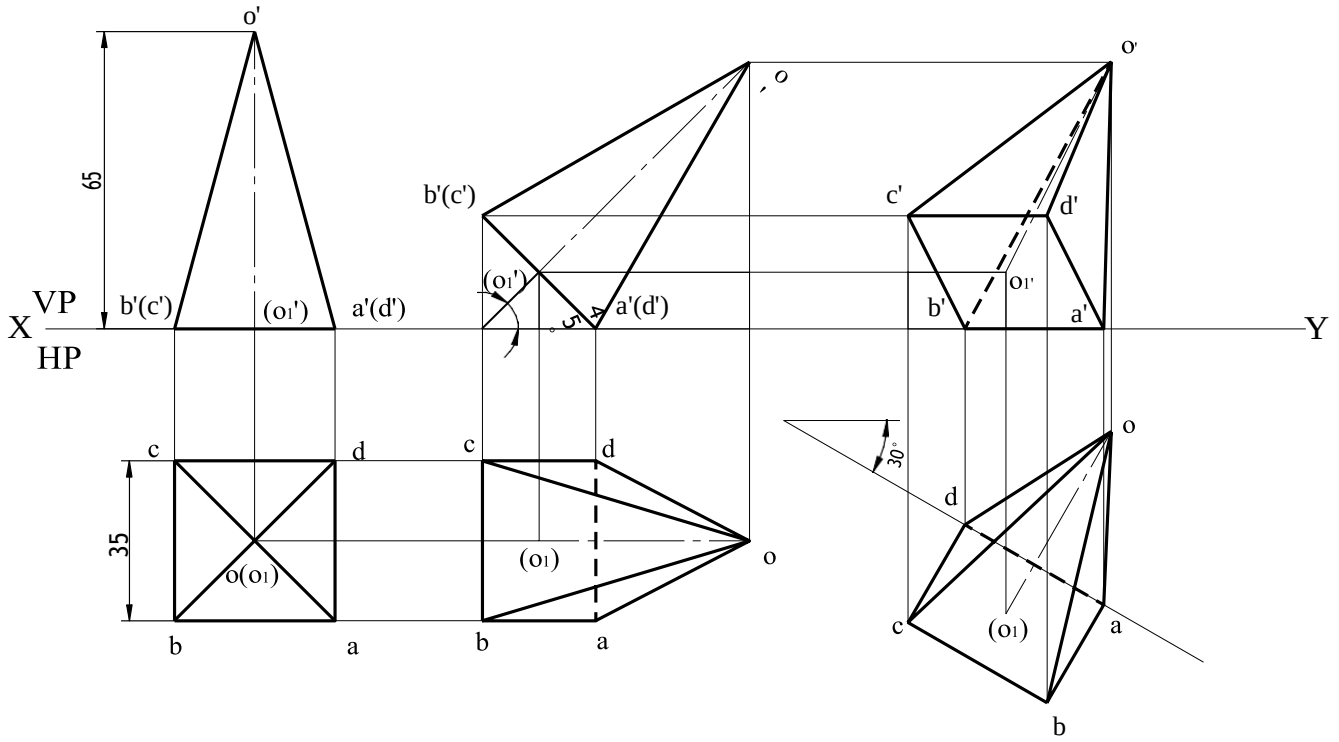

6. A square pyramid 35mm sides of base and 60mm axis length rests on HP on one of its corners of the base such that the two base edges containing the corner on which it rests makes equal inclination with HP. Draw the projections of the pyramid when the axis of the pyramid is inclined to HP at 40^0 and to VP at 30^0

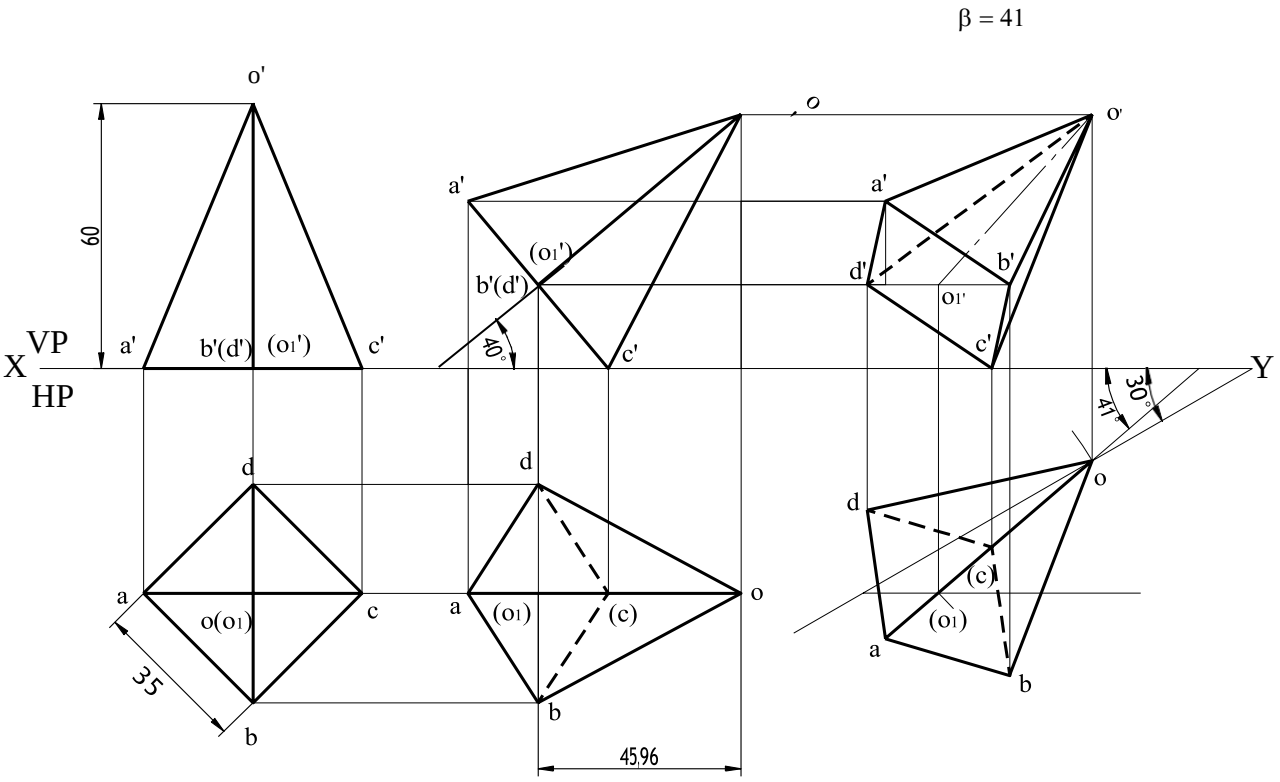

7. A pentagonal pyramid 25mm sides of base and 60mm axis length rests on HP on one of its edges of the base which is inclined to VP at 30^0. Draw the projections of the pyramid when the axis is inclined to HP at 40^0. [***Assignment***]

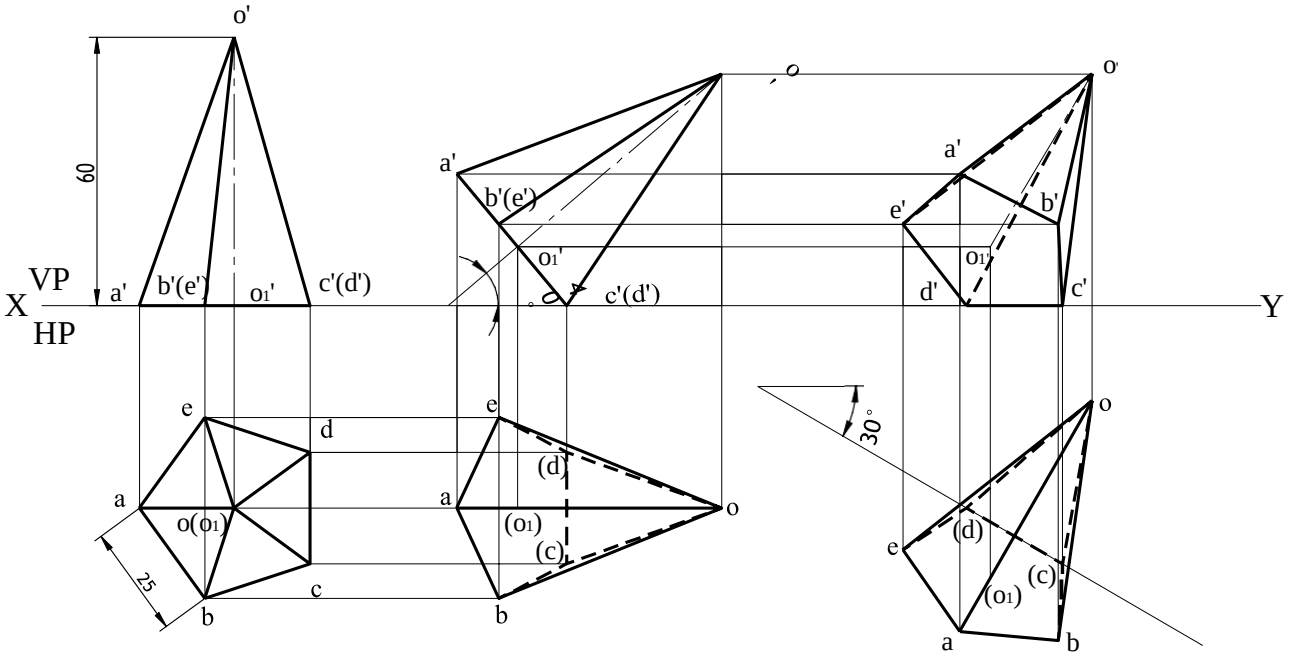

8. A pentagonal pyramid 25mm sides of base and 50mm axis length rests on HP on one of its corners of the base such that the two base edges containing the corner on which it rests makes equal inclination with HP. Draw the projections of the pyramid when the axis of the pyramid is inclined to HP at 40^0 and to VP at 30^0.

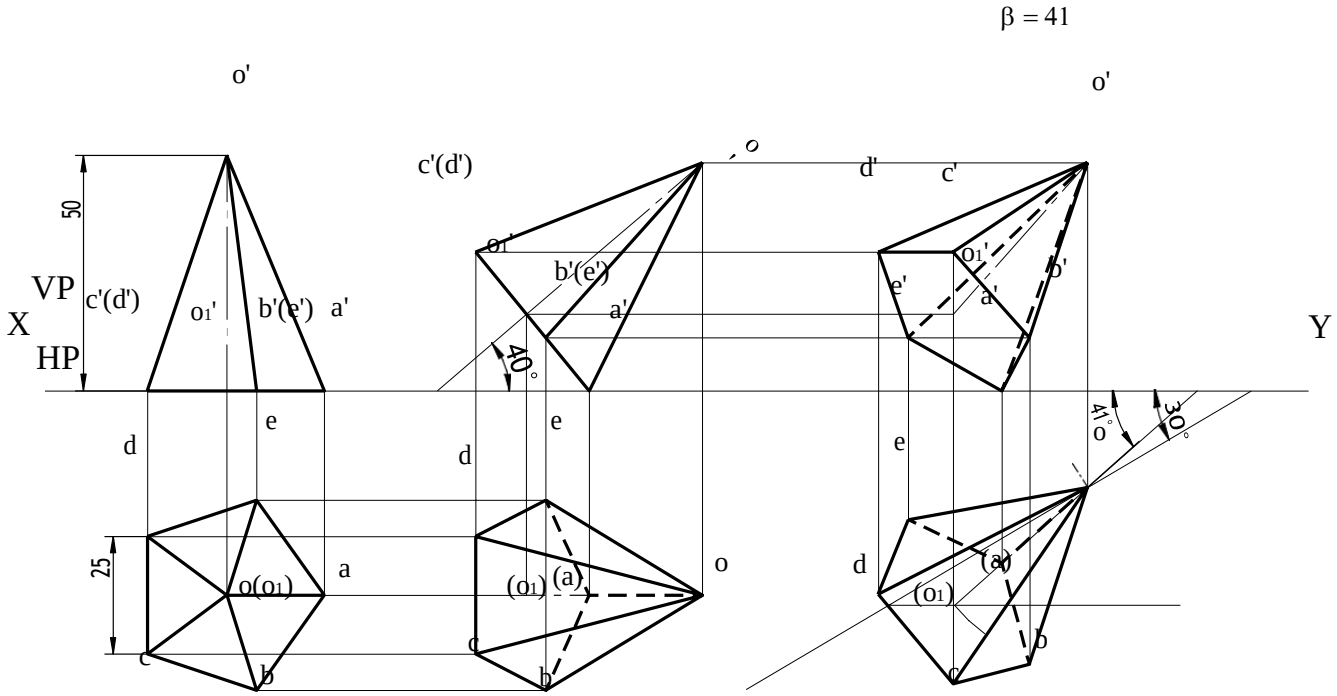

9. A hexagonal pyramid 25mm sides of base and 50mm axis length rests on HP on one of its corners of the base such that the two base edges containing the corner on which it rests makes equal inclination with HP. Draw the projections of the pyramid when the axis of the pyramid is inclined to HP at 40^0 and to VP at 30^0.

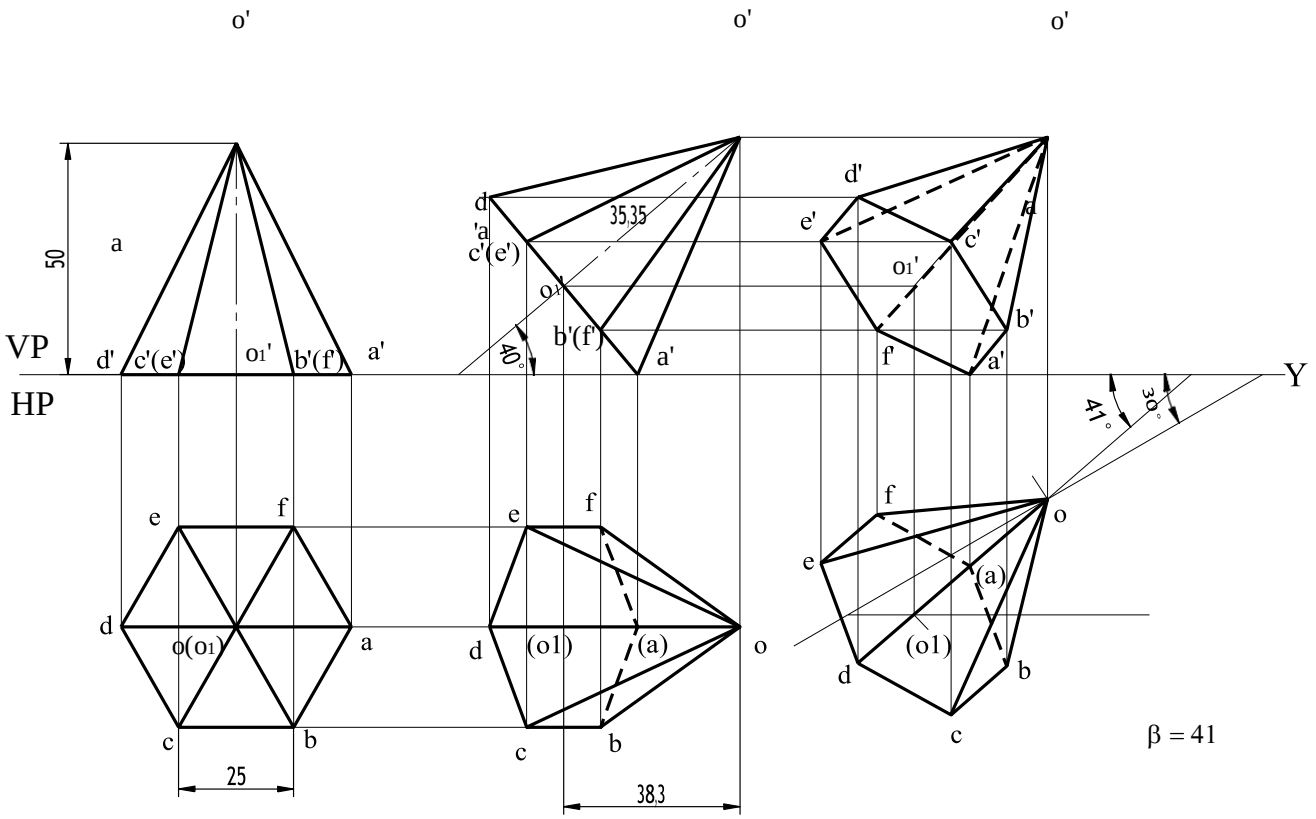

MODULE 3

ISOMETRIC PROJECTIONS

AND

CONVERSION OF SIMPLE ISOMETRIC DRAWINGS INTO ORTHOGRAPHIC VIEWS.

[25 MARKS]

1. Three cubes of sides 60mm, 40mm and 20mm are placed centrally one above the other in the ascending order of their side. Draw the isometric projection of the combination.

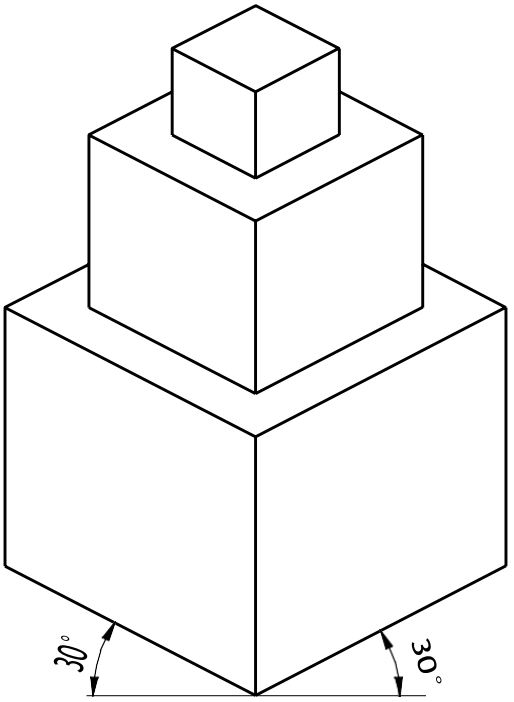

2. The rectangular slabs (lxbxh) 100mmx60mmx20mm and 100mmx40mmx20mm 100mmx20mmx20mm are placed one above the other in the ascending order of their width- b, such that their longer axes are co-planar. Draw the isometric projection of the combination.

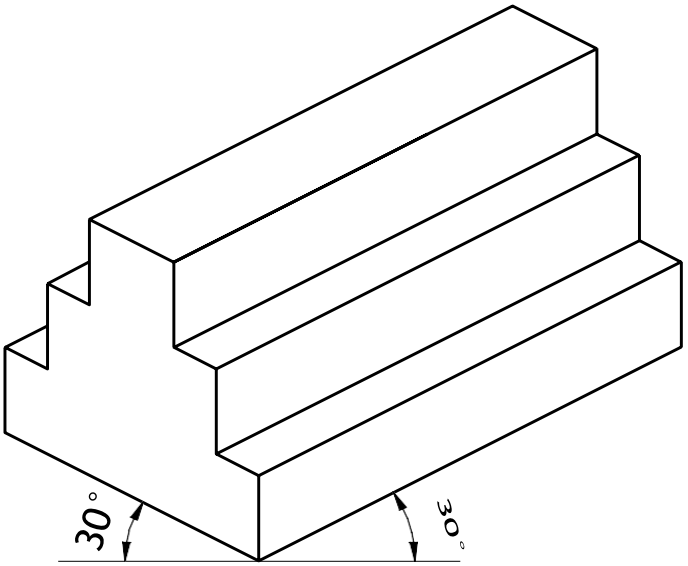

3. A triangular prism base side 30mm and length 70mm is resting on its rectangular face on top of a square slab side 70mm and 25mm thick. Draw the isometric projection of the combination.

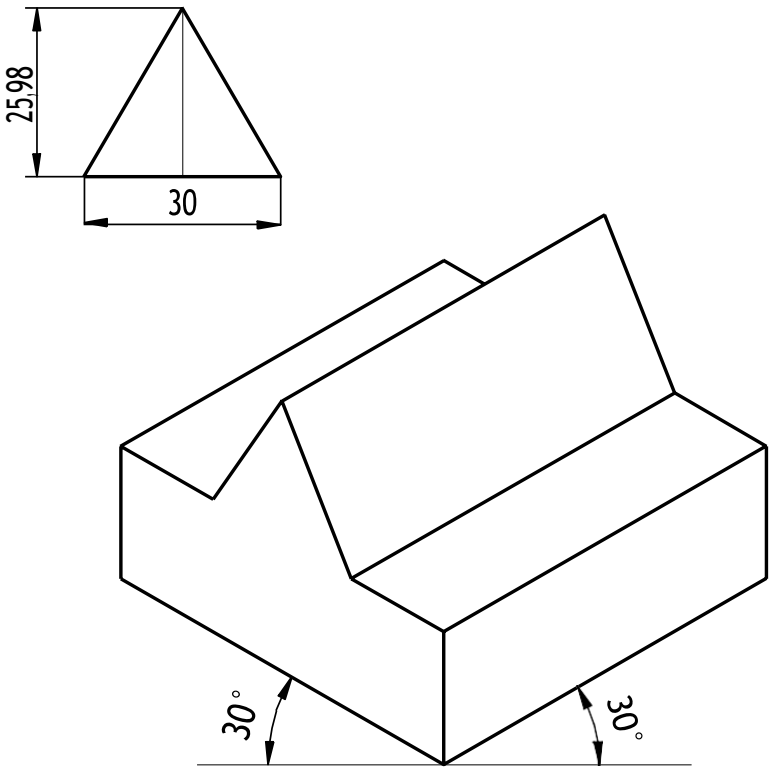

4. A sphere diameter 60mm is placed centrally on the top face of a square prism side 60mm and height 70mm. draw the isometric projection of the combination.

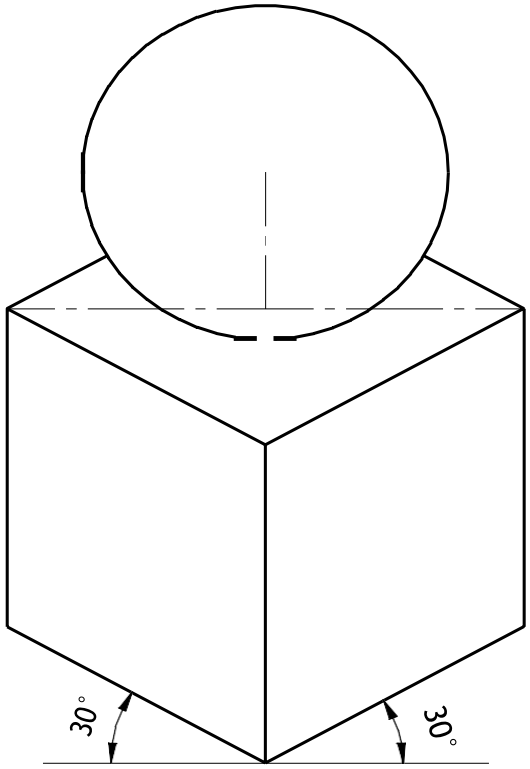

5. A rectangular slab base 100mmx80mm and height 30mm has a full dept co-axial square hole side 40mm such that one of the sides of the square is parallel to one of the sides of the rectangle. Draw the isometric projection of the combination.

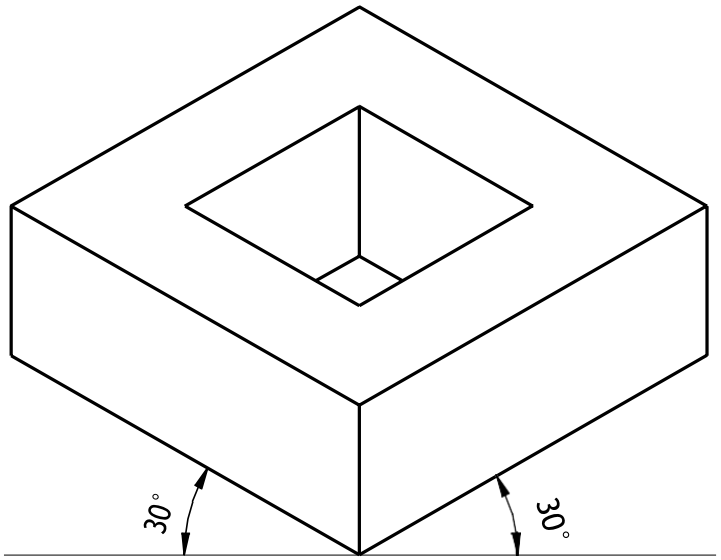

6. A rectangular pyramid of base 40mmX25mm and height 50mm is placed centrally on a rectangular slab sides 100mmX60mm and thickness 20mm. Draw the isometric projection of the combination.

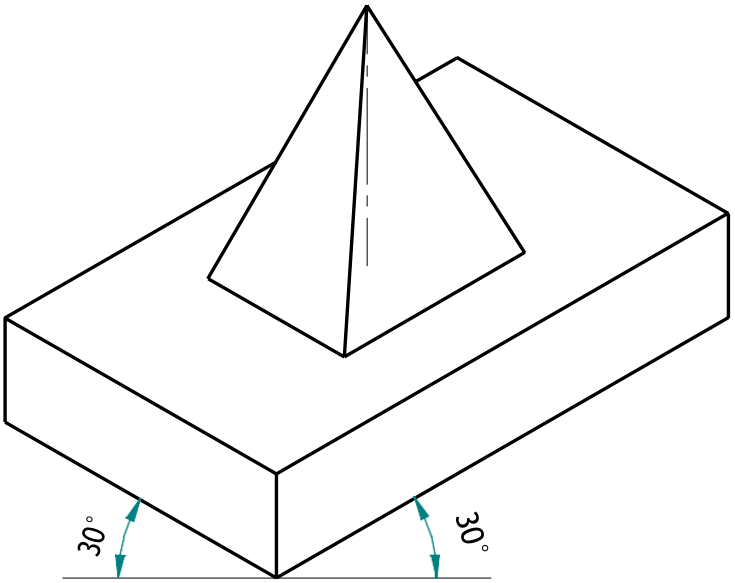

7. A hemisphere of 40mm diameter is supported coaxially on vertex of a cone of base dia 60mm and axis length 50mm. the flat circular face of the hemisphere is facing upside. Draw the isometric projection of the combination of solids.

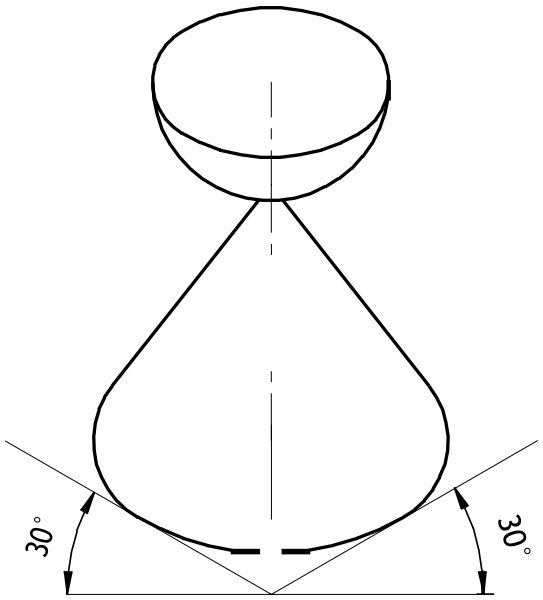

8. A frustum of cone base diameter 50mm, top diameter 25mm and height 50mm is placed centrallycylindrical slab of diameter 100mm and thickness 30mm. Draw the isometric projection of the combination.

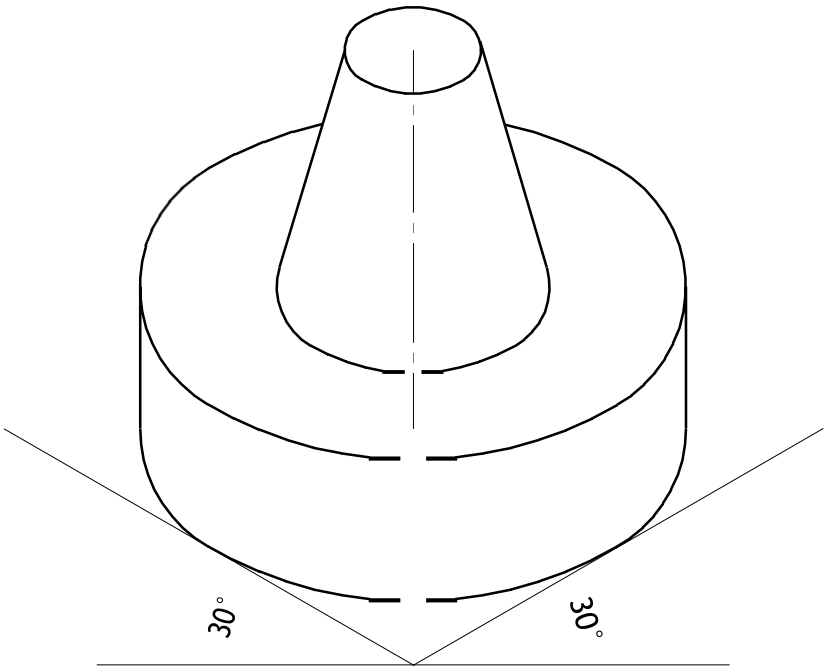

9. A sphere diameter 40mm is placed centrally on the flat face of a hemisphere diameter 60mm. Draw the isometric projection of the combination.

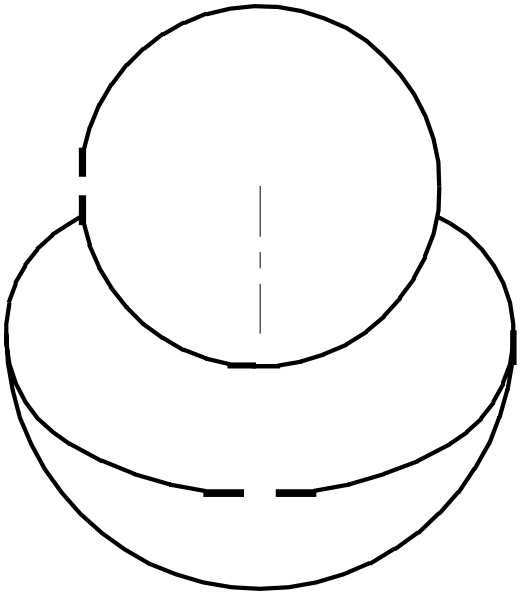

10. Following figure(I), shows the front and side views of solid. Draw the isometric projection of the solid.

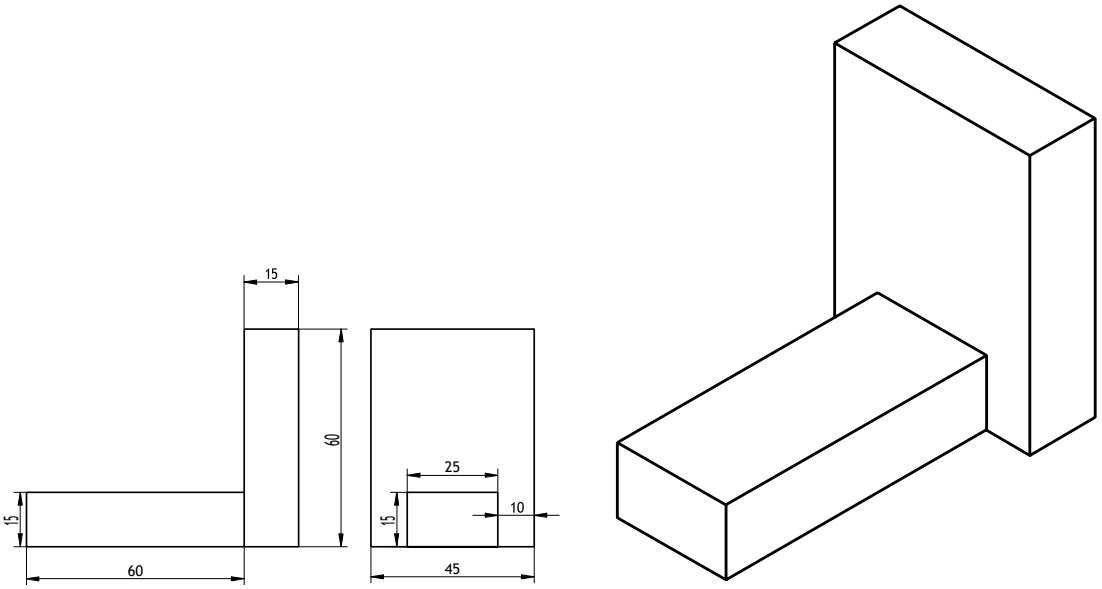

Fig : 1

MODULE 4

DEVELOPMENT OF LATERAL SURFACES OF SOLIDS

[25 MARKS]

Problem1. Draw the development of the lateral surface of a funnel consisting of a cylinder and a frustum of a cone. The diameter of the cylinder is 20mm and top face diameter of the funnel is 80mm. The height of frustum and cylinder are equal to 60mm and 40mm respectively.

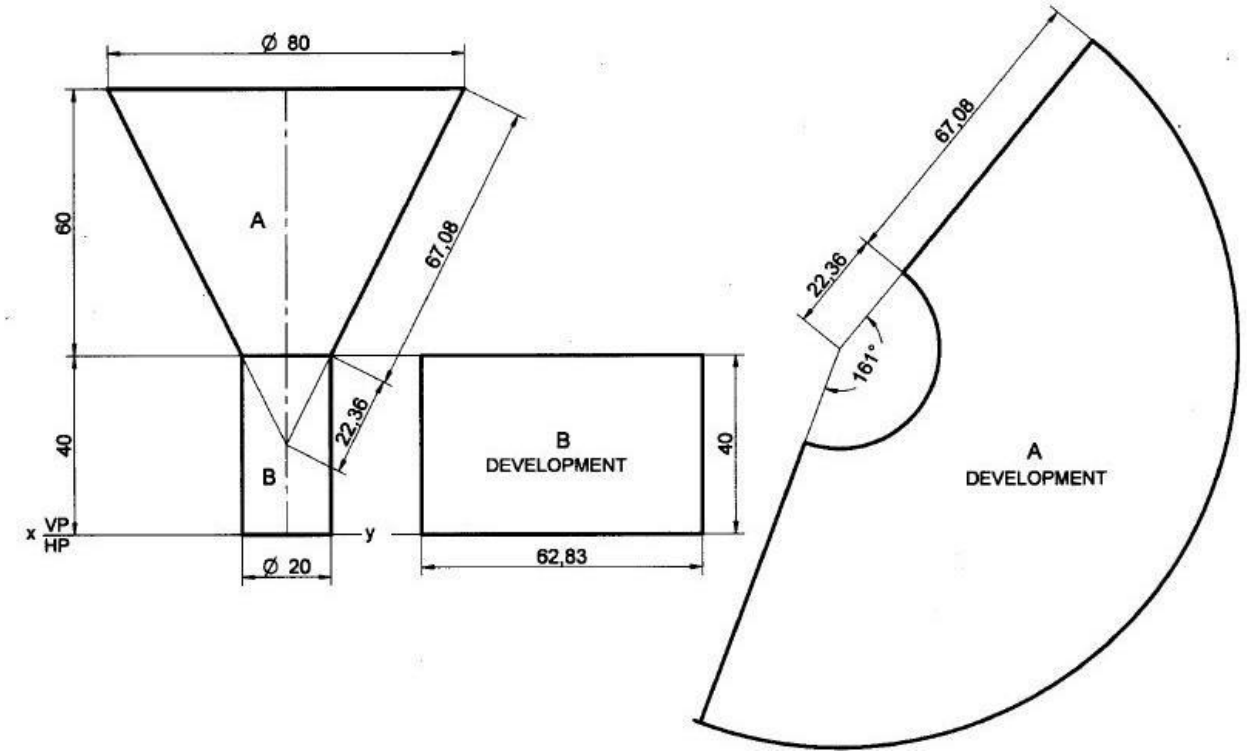

Problem 2. Draw the development of the tray whose top view and front view are shown in figure.

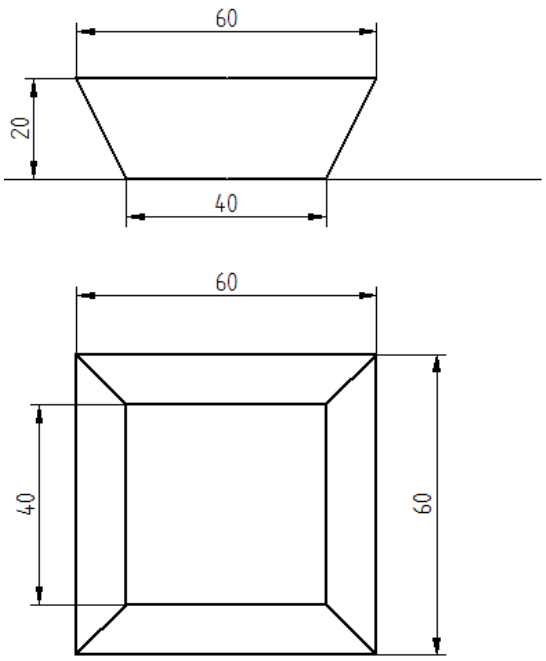

Figure: Q. No.

Solution:

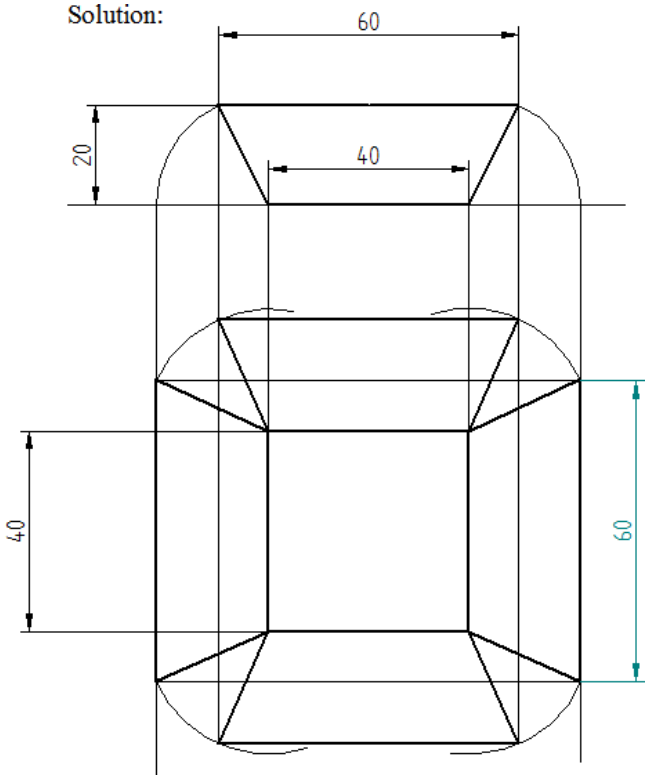

Problem 3. A cone of base 50 mm diameter and height 65 mm rests with its base on H.P. A section plane perpendicular to V.P and inclined at 30° to HP bisects the axis of the cone. Draw the development of the lateral surface of the truncated cone.

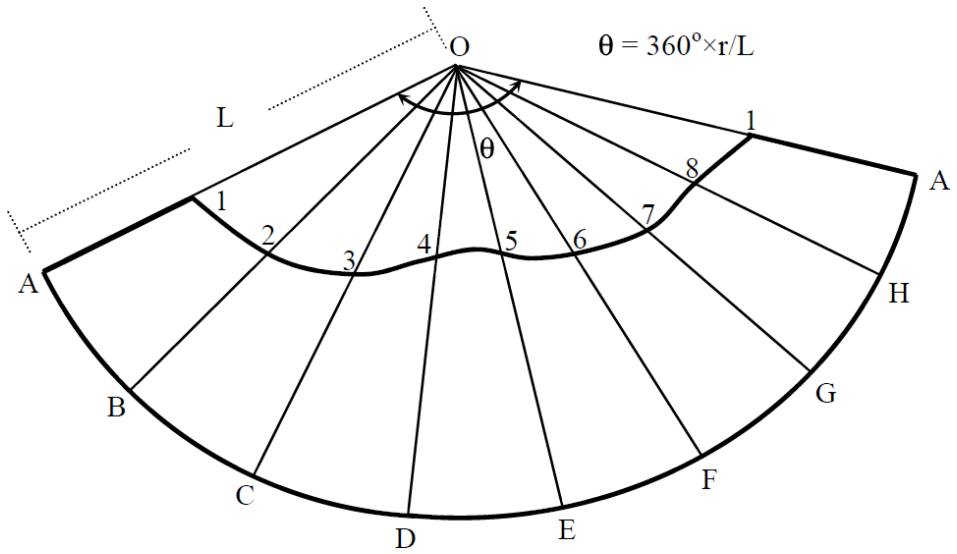

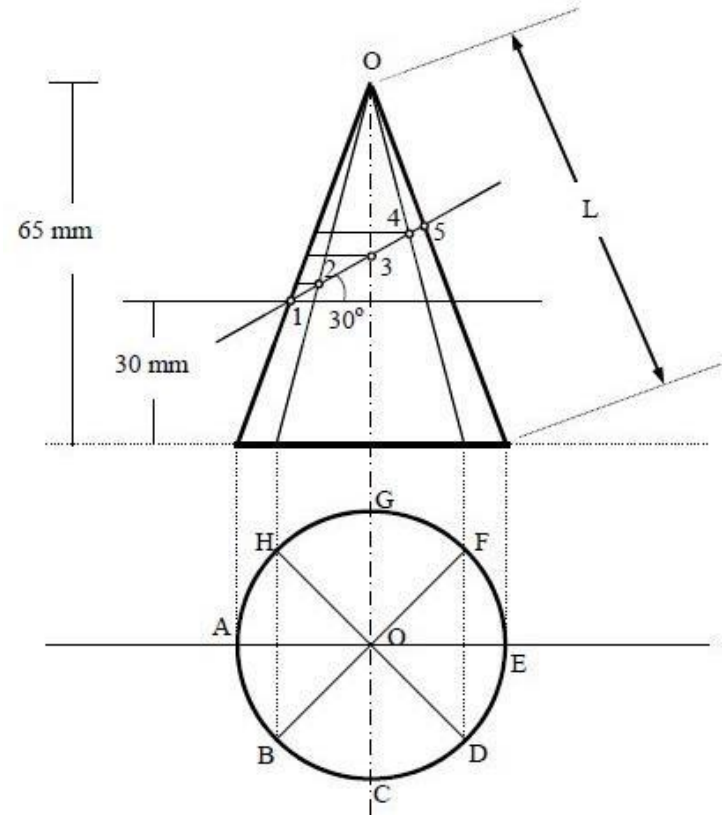

Problem 4. A hexagonal prism, edge of base 20 mm and axis 50 mm long, rests with its base on HP such that one of its rectangular faces is parallel to V.P. It is cut by a plane perpendicular to VP, inclined at 45^0 to HP and passing through the night comer of the top face of the prism. Draw the sectional top view and develop the lateral surface of the truncated prism.

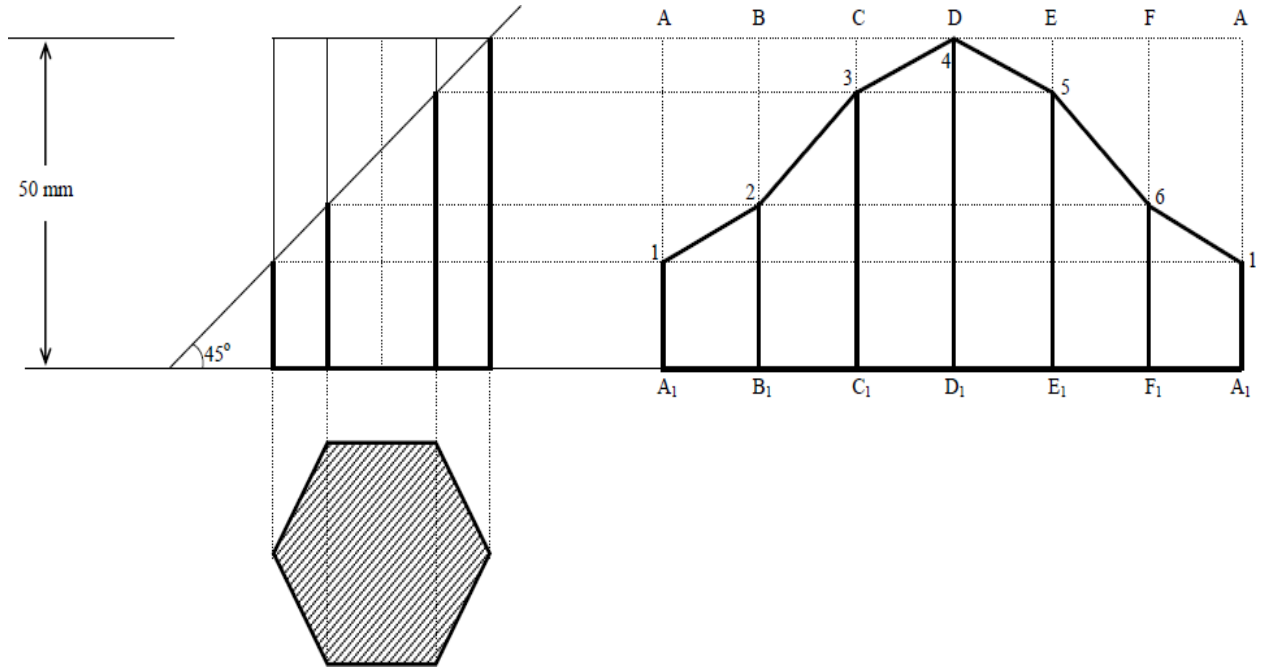

Problem 5. A vertical cylinder of base diameter 45mm and axis length 60mm is cut by a plane perpendicular to VP and inclined at 50° to HP, is passing through the center point of the top face. Draw the development of the lateral surface of the cylinder.

Solution

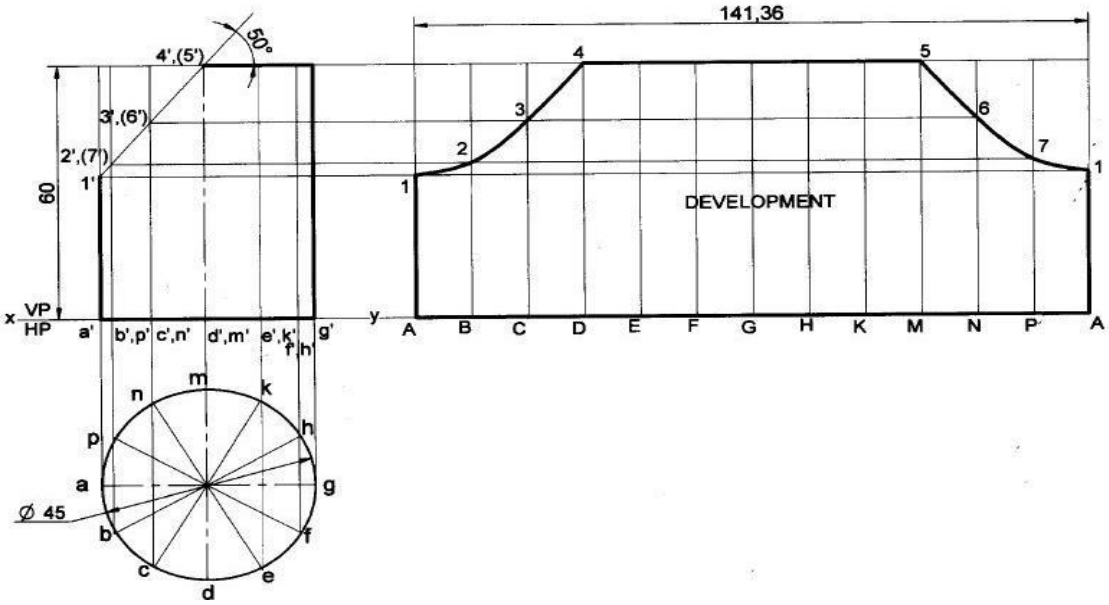

Problem 6. A regular pentagonal pyramid of side of base 35mm and altitude 65mm has its base on HP with a side of base perpendicular to VP. The pyramid is cut by a section plane which is perpendicular to the VP and inclined at 30° to HP. The cutting plane meets the axis of the pyramid at a point 30mm below the vertex. Obtain the development of the remaining part of the pyramid.
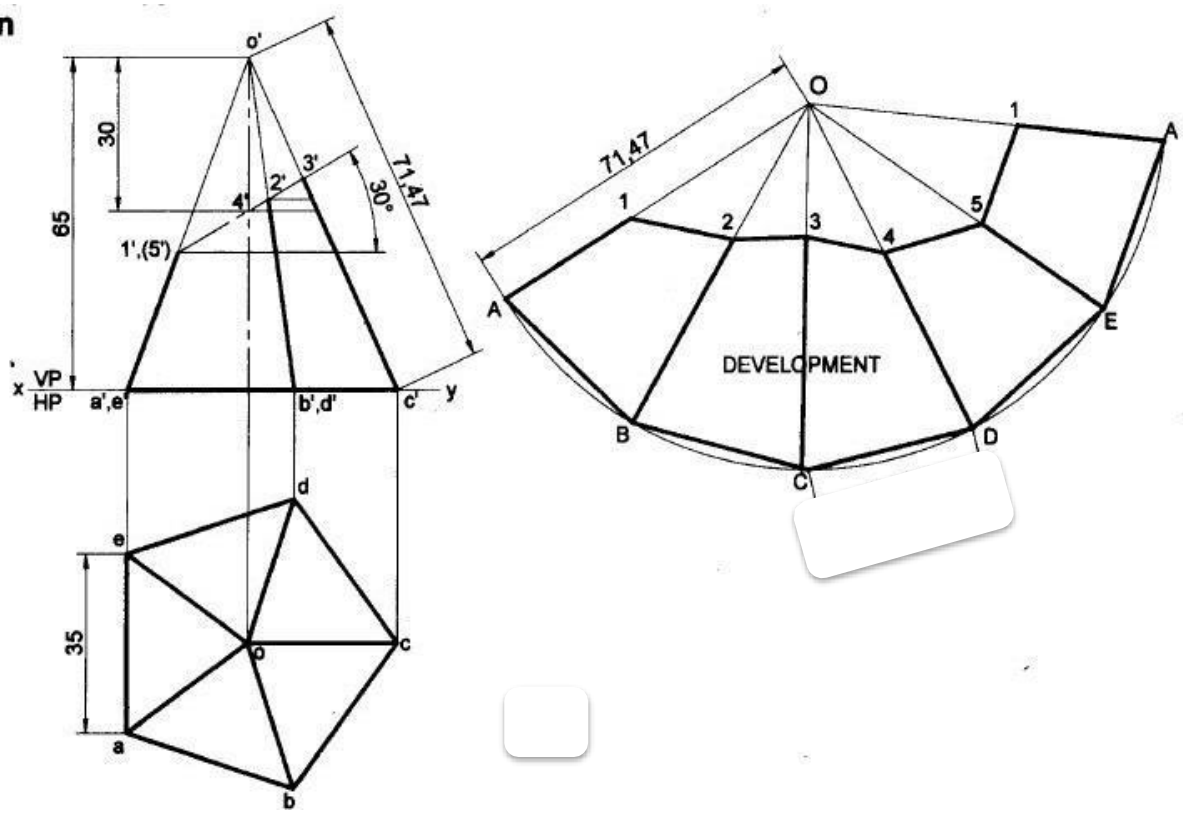
Solution